DIST	COUNTY	ROUTE	POST MILES TOTAL PROJECT	SHEET No.	TOTAL SHEETS
X	X	X	X	X	X

REGISTERED CIVIL ENGINEER X DATE

PLANS APPROVAL DATE

REGISTERED PROFESSIONAL ENGINEER X No. X Exp. X CIVIL STATE OF CALIFORNIA

The State of California or its officers or agents shall not be responsible for the accuracy or completeness of electronic copies of this plan sheet.

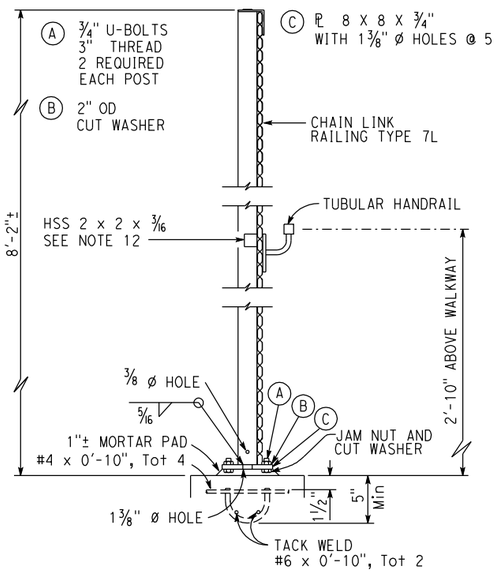

TYPICAL POST DETAIL

1½" = 1'-0"

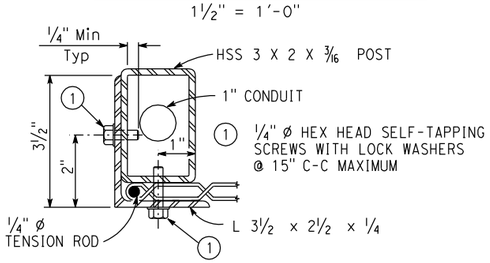

SECTION E-E

6" = 1'-0"

NOTE: Holes (For self-tapping screws) in end post shall be drilled before conduits are in place

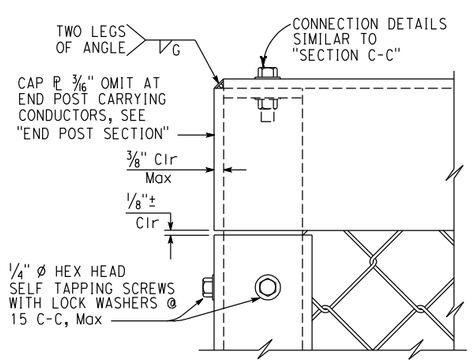

DETAIL A

6" = 1'-0"

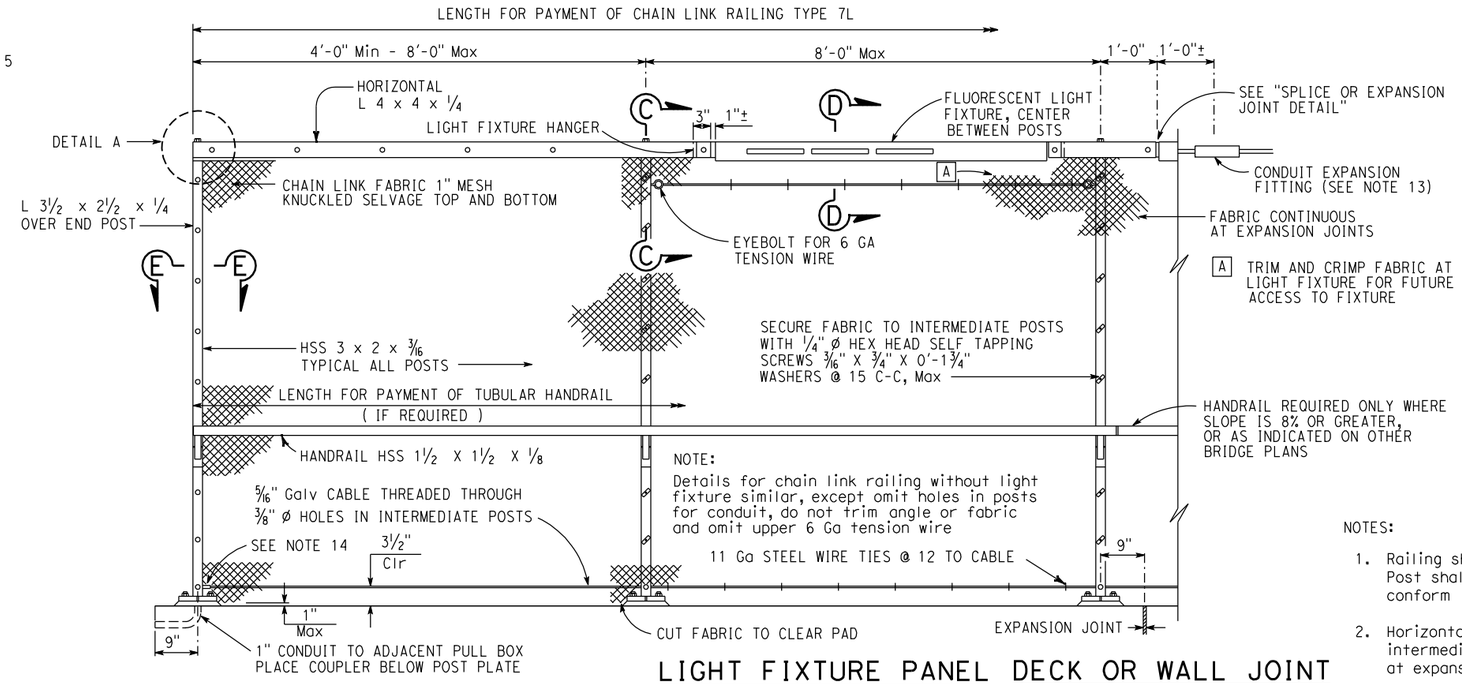

END POST

LIGHT FIXTURE PANEL

DECK OR WALL JOINT

ELEVATION

¾" = 1'-0"

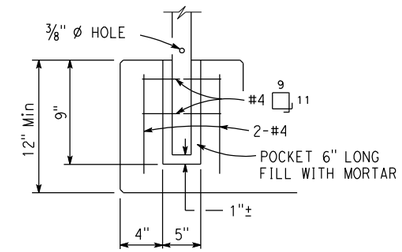

ALTERNATIVE ANCHORAGE DETAIL

1½" = 1'-0"

MAY BE USED WHEN THICKNESS OF CONCRETE IS 1'-0" OR MORE
NOT TO BE USED WHEN POST CONTAINS ELECTRICAL CONDUIT

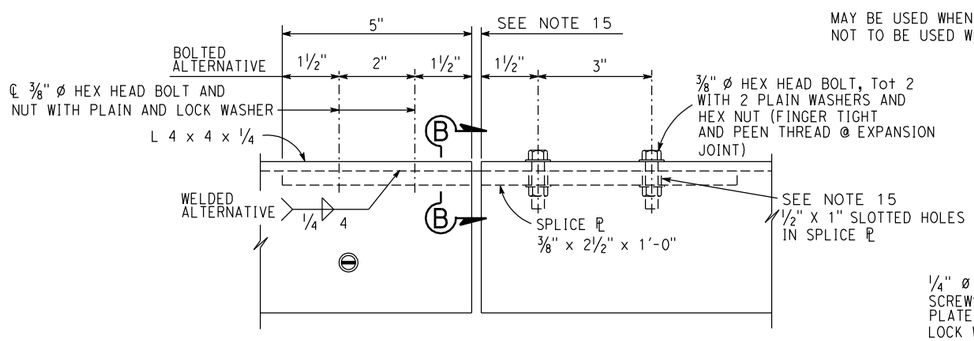

SPLICE OR EXPANSION JOINT DETAIL

6" = 1'-0"

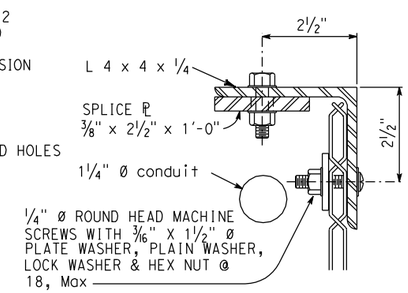

SECTION B-B

6" = 1'-0"

NOTES:

1. Railing shall conform to horizontal and vertical alignment. Post shall be vertical. Horizontal angle shall be bent to conform to horizontal alignment if radius is 150'-0" or less
2. Horizontal angle shall be continuous over not less than two intermediate posts, except that a shorter length is permitted at expansion joints and other rail discontinuities
3. When railing is placed on curved horizontal alignment with radius of 150'-0" or less, drill ½" x 3" deep hole in slab and set in epoxy adhesives ⅜" Ø welded eyebolt for 5/16" cable to limit the midordinate distance between the 5/16" cable and curve to be 1" maximum
4. Place fabric parallel to slope
5. Alternative details may be submitted by the Contractor for Engineer's approval
6. Provide thimbles at all cable loops
7. See "PEDESTRIAN OVERCROSSING FLUORESCENT LIGHTING FIXTURE" for details not shown
8. Handrail tube continuous over two or more supports
9. Peen all exposed bolts
10. Electrical details for corner post are similar to those shown. Fabric to be trimmed and crimped around handhole
11. Conduit holes in posts will vary with slope of structure
12. HSS 2 x 2 x 3/16, required for curves with radius of 150'-0" or less. Bend to conform to curve
13. Conduit expansion fitting to be required at deck or wall expansion joints with movement ratings greater than 1"
14. Anchor 5/16" galvanized cable at end post with ½" Ø stud socket assembly or ½" Ø welded eyebolt and crimped sleeve clamp. Provide 1½" minimum take-up at each anchorage.
15. Expansion joint same dimension as expansion joint in deck or wall. Increase slotted hole length and splice PL length correspondingly.

STANDARD DRAWING

FILE NO. xs16-210-1

APPROVAL DATE July 2011

STATE OF CALIFORNIA DEPARTMENT OF TRANSPORTATION

DIVISION OF ENGINEERING SERVICES

BRIDGE NO. X

POST MILE X

X

CHAIN LINK RAILING TYPE 7L

DETAILS NO. 1

DS OSD 2147A (ENGLISH STANDARD DRAWING "XS" BORDER REV. (02-02-11)

ORIGINAL SCALE IN INCHES FOR REDUCED PLANS 0 1 2 3

UNIT: X
PROJECT NUMBER & PHASE: X
CONTRACT NO.: X

DISREGARD PRINTS BEARING EARLIER REVISION DATES

REVISION DATES

SHEET X OF X

FILE => $REQUEST

USERNAME => $USER DATE PLOTTED => $DATE TIME PLOTTED => $TIME