DIST	COUNTY	ROUTE	POST MILES TOTAL PROJECT	SHEET No.	TOTAL SHEETS
X	X	X	X	X	X

REGISTERED CIVIL ENGINEER X DATE

PLANS APPROVAL DATE

REGISTERED PROFESSIONAL ENGINEER X No. X Exp. X CIVIL STATE OF CALIFORNIA

The State of California or its officers or agents shall not be responsible for the accuracy or completeness of electronic copies of this plan sheet.

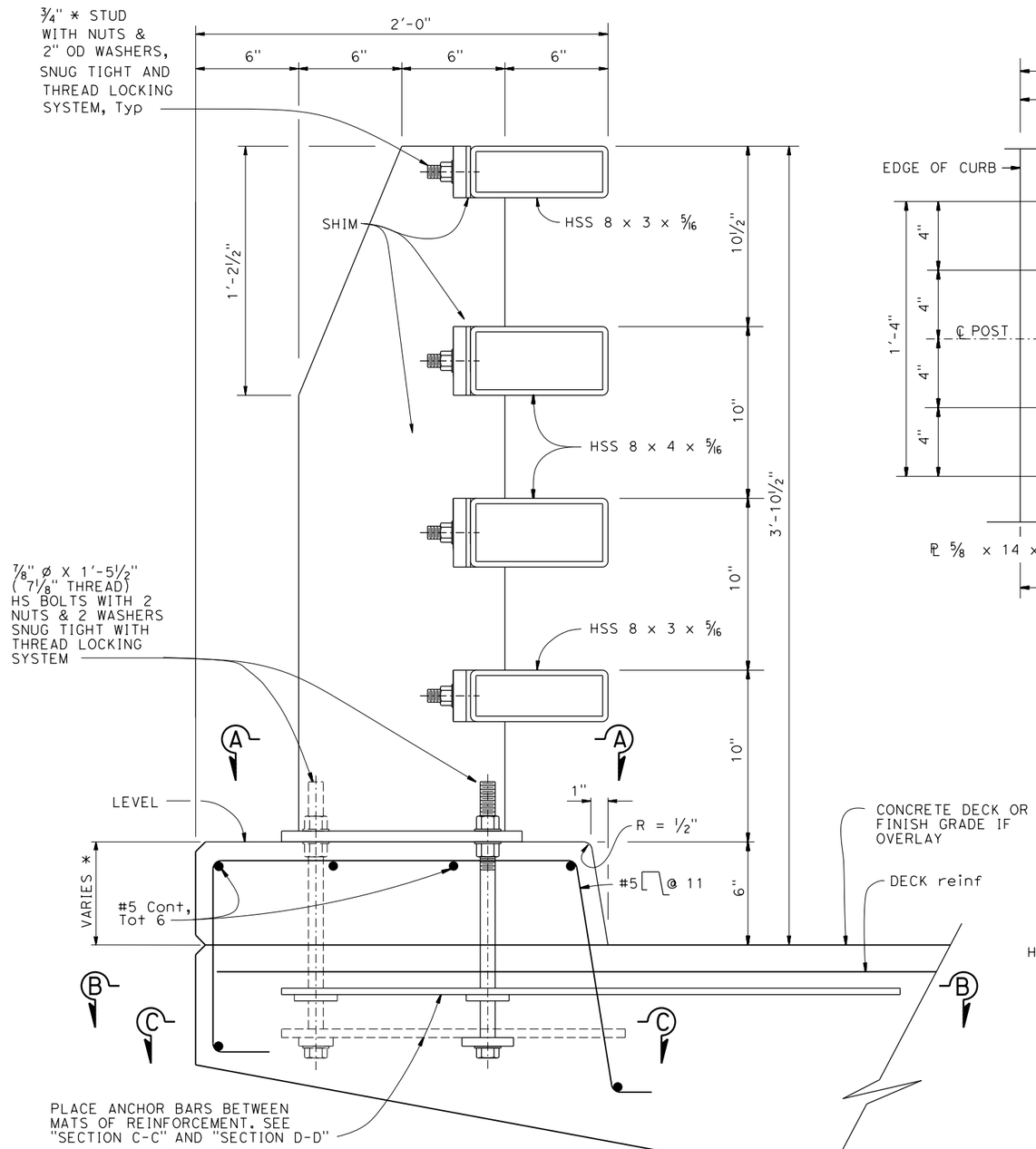

* DIMENSION VARIES WITH ROADWAY CROSS SLOPE AND WITH THICKNESS OF OVERLAY IF APPLICABLE.

TYPICAL SECTION

3" = 1'-0"

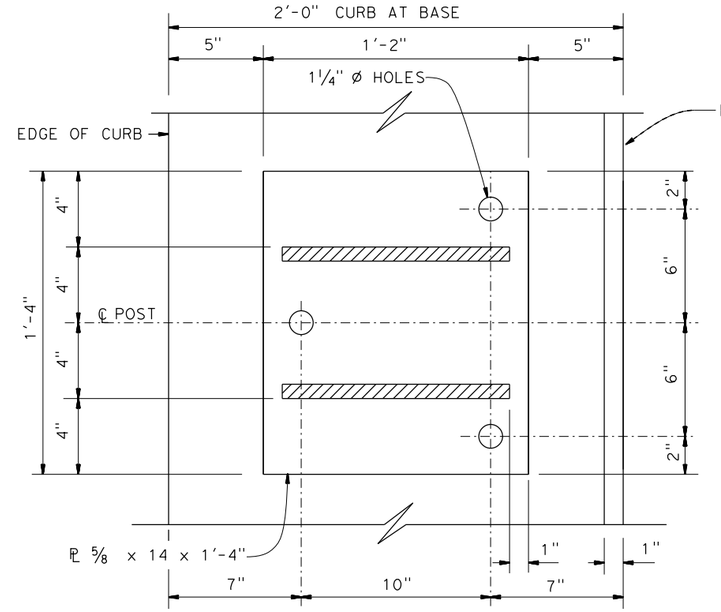

SECTION A-A

3' = 1'-0"

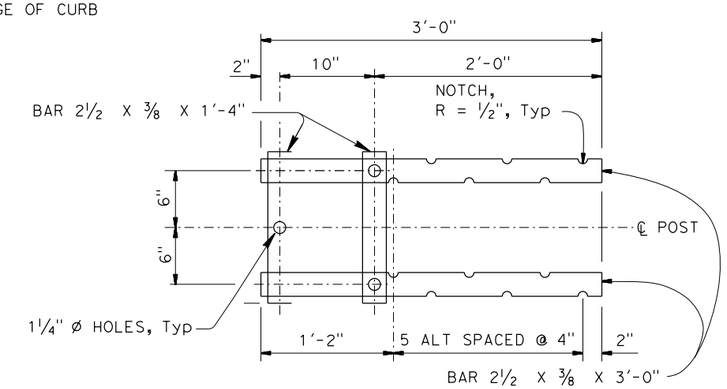

SECTION B-B

1 1/2" = 1'-0"

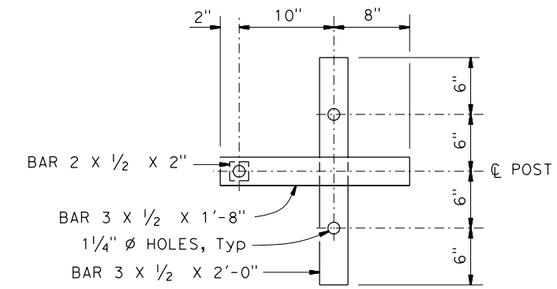

SECTION C-C

1 1/2" = 1'-0"

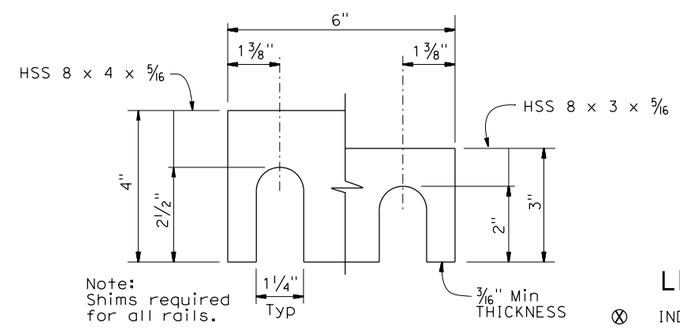

Note: Shims required for all rails.

SHIM DETAIL

6" = 1'-0"

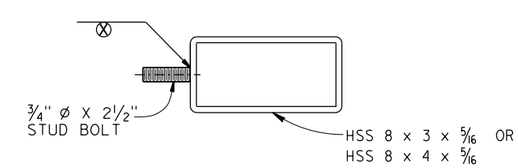

SECTION AT POST

3" = 1'-0"

LEGEND:

⊗ INDICATES STUD WELD

STANDARD DRAWING		STATE OF CALIFORNIA DEPARTMENT OF TRANSPORTATION	DIVISION OF ENGINEERING SERVICES	BRIDGE NO. X / POST MILE X	X CALIFORNIA ST-70 BRIDGE RAIL DETAILS No. 1
FILE NO. xs16-130-1	APPROVAL DATE January 2015				

DS OSD 2147A (ENGLISH STANDARD DRAWING "XS" BORDER REV. (02-02-11)

ORIGINAL SCALE IN INCHES FOR REDUCED PLANS 0 1 2 3

UNIT: X
PROJECT NUMBER & PHASE: X
CONTRACT NO.: X

DISREGARD PRINTS BEARING EARLIER REVISION DATES

REVISION DATES 6-14-14 12-19-14 1-14-15

SHEET X OF X

FILE => $REQUEST

USERNAME => $USER DATE PLOTTED => $DATE TIME PLOTTED => $TIME