DIST	COUNTY	ROUTE	POST MILES TOTAL PROJECT	SHEET No.	TOTAL SHEETS
X	X	X	X	X	X

REGISTERED CIVIL ENGINEER X DATE

PLANS APPROVAL DATE

REGISTERED PROFESSIONAL ENGINEER X NO. X EXP. X CIVIL STATE OF CALIFORNIA

The State of California or its officers or agents shall not be responsible for the accuracy or completeness of electronic copies of this plan sheet.

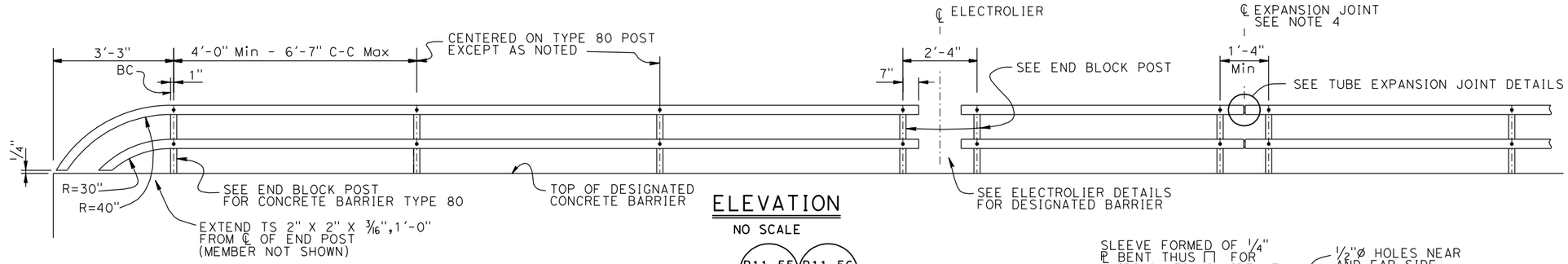

ELEVATION

NO SCALE

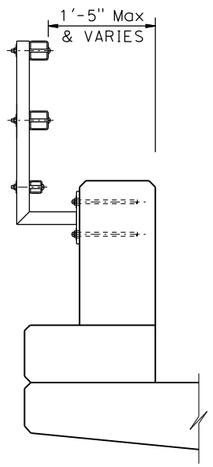

NOTE:
For details not shown, see "TYPE 732 OR 736"

TYPE 80 END BLOCK POST

1" = 1'-0"

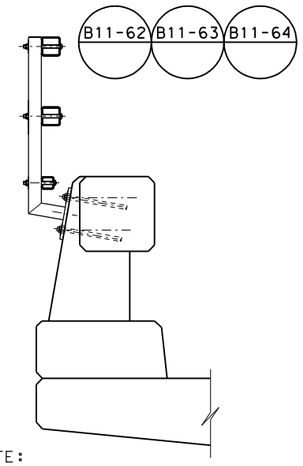

NOTE:
For details not shown, see "TYPE 732 OR 736"

TYPE 80

1" = 1'-0"

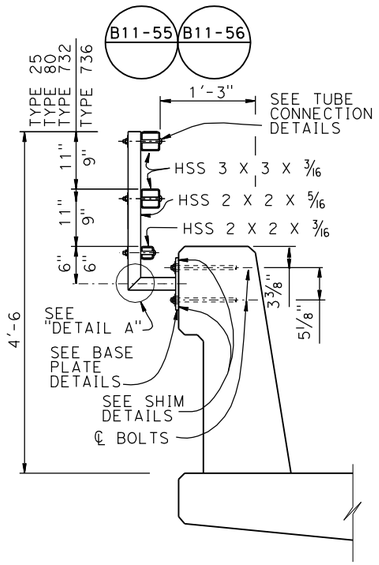

TYPE 732 OR 736

1" = 1'-0"

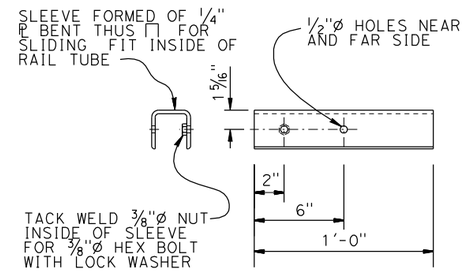

SLEEVE DETAIL

NO SCALE

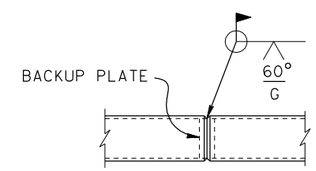

WELDED SPLICE DETAIL

NO SCALE

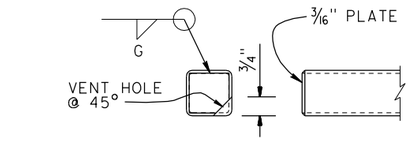

RAIL CAP DETAIL

NO SCALE

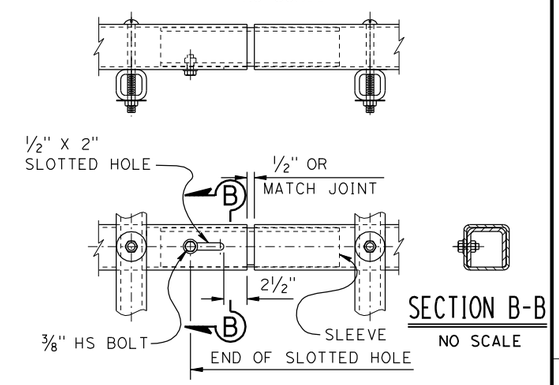

SECTION B-B

NO SCALE

TUBE EXPANSION JOINT DETAILS

NO SCALE

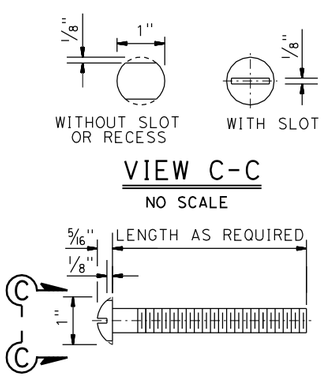

VIEW C-C

NO SCALE

ROUND HEAD BOLT DETAIL

NO SCALE

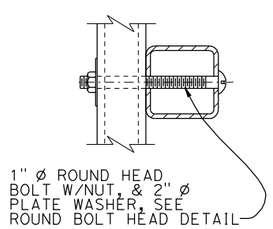

TUBE CONNECTION DETAIL

NO SCALE

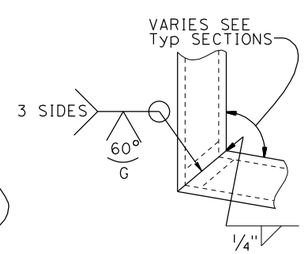

DETAIL A

NO SCALE

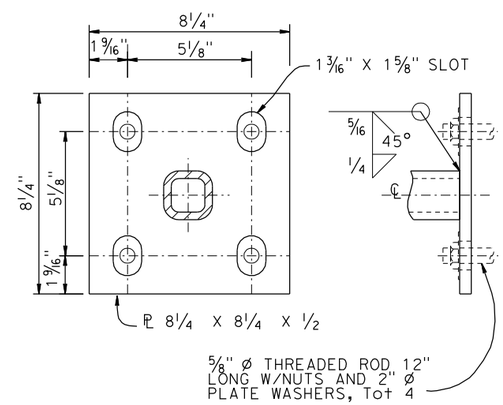

BASE PLATE DETAIL

NO SCALE

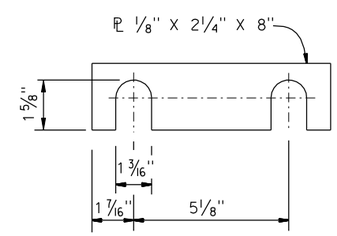

SHIM DETAILS

NO SCALE

NOTES:

1. Post shall be normal to railing.
2. Rail tubes shall be shop bent or fabricated to fit horizontal curve when radius is less than 12".
3. Tube splices shall be located in the tubes spanning deck or wall joints. Increase joint width in tubes to match expansion joint width and increase sleeve length correspondingly.
4. Top rail tube shall be continuous over not less than two posts except a short post spacing is permitted near deck or wall joints, electroliers, or other rail discontinuities as noted.
5. See Project Plans for limits of tubular hand railing.

STANDARD DRAWING

FILE NO. xs16-035

APPROVAL DATE July 2011

STATE OF CALIFORNIA DEPARTMENT OF TRANSPORTATION

DIVISION OF ENGINEERING SERVICES

BRIDGE NO. X

POST MILE X

X

CONCRETE BARRIER TYPE 80, 732 & 736

TUBULAR BICYCLE RAILING DETAILS

DS OSD 2147A (ENGLISH STANDARD DRAWING "XS" BORDER REV. (02-02-11))

ORIGINAL SCALE IN INCHES FOR REDUCED PLANS 0 1 2 3

UNIT: X

PROJECT NUMBER & PHASE: X

CONTRACT NO.: X

DISREGARD PRINTS BEARING EARLIER REVISION DATES

REVISION DATES

SHEET X OF X

FILE => $REQUEST

USERNAME => $USER DATE PLOTTED => $DATE TIME PLOTTED => $TIME