DIST	COUNTY	ROUTE	POST MILES TOTAL PROJECT	SHEET No.	TOTAL SHEETS
X	X	X	X	X	X

REGISTERED CIVIL ENGINEER X DATE

PLANS APPROVAL DATE

REGISTERED PROFESSIONAL ENGINEER X No. X Exp. X CIVIL STATE OF CALIFORNIA

The State of California or its officers or agents shall not be responsible for the accuracy or completeness of electronic copies of this plan sheet.

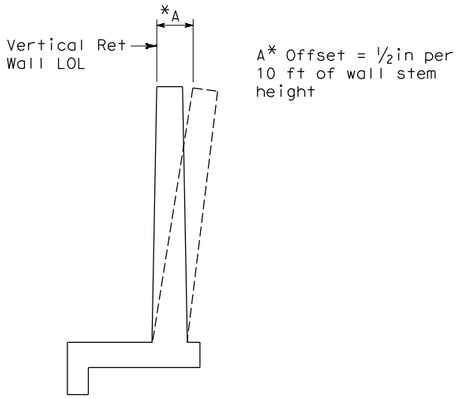

WALL OFFSET

No Scale

Values for offsetting forms to be determined by engineer

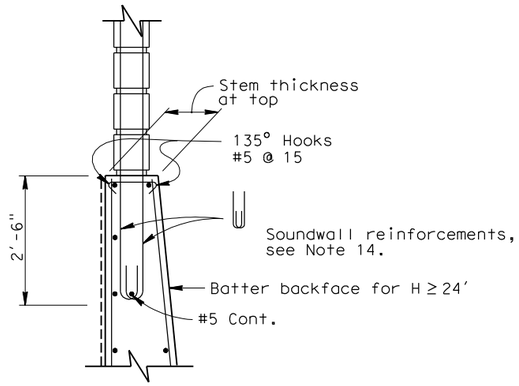

DETAIL A

No Scale

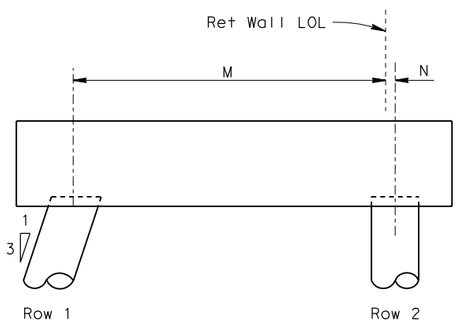

CONFIGURATION I

No Scale

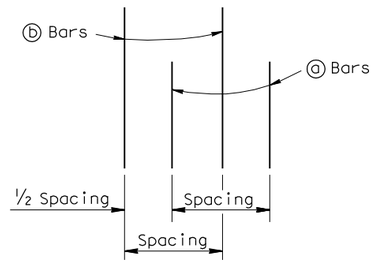

DETAIL B

No Scale

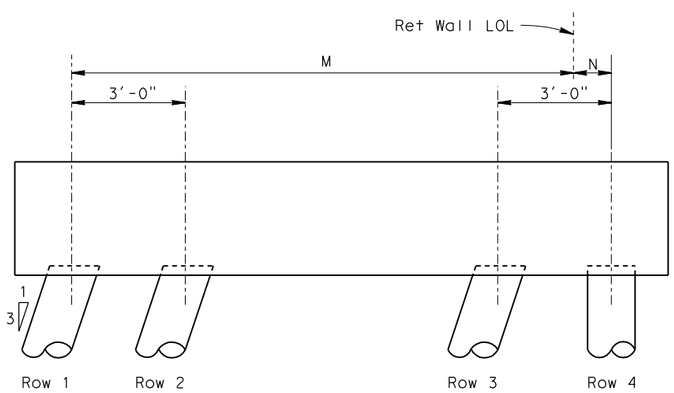

CONFIGURATION II

No Scale

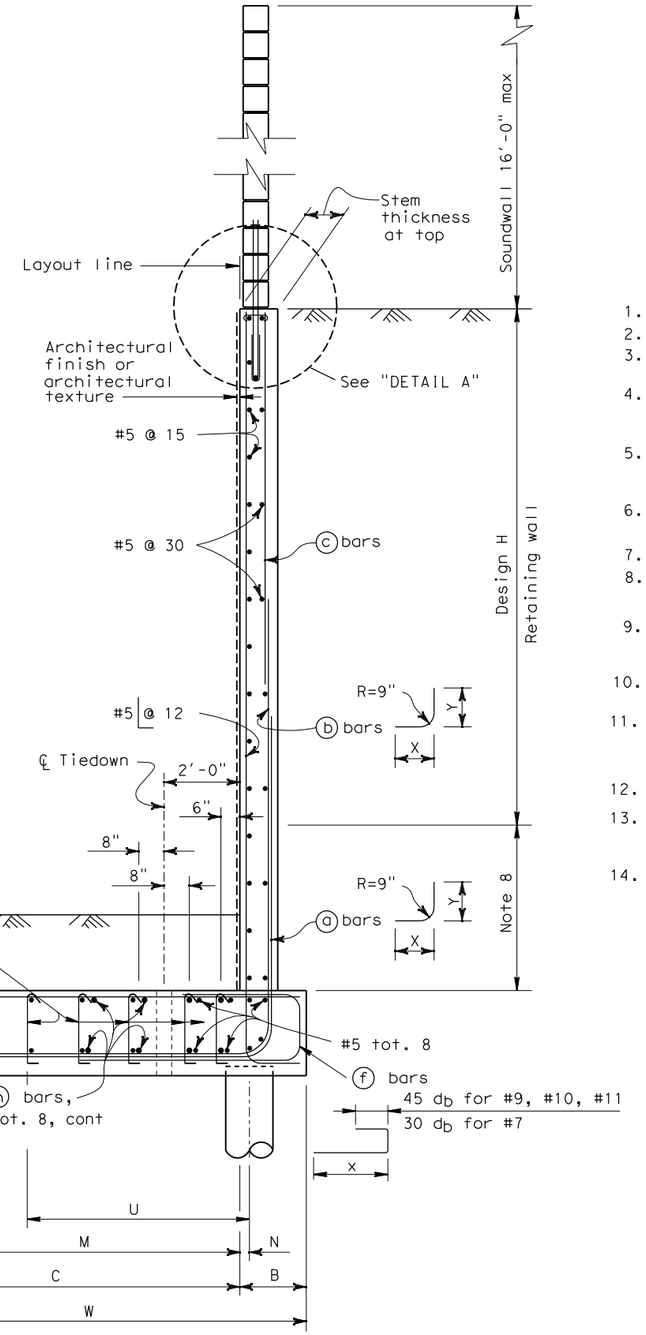

PILE FOOTING SECTION

No Scale

GENERAL NOTES

1. Class 45 Concrete Piles were used for the design.
2. Pile batter shown are 1:3.
3. Minimum distance between center of pile and edge of footing is 1'-6".
4. Reduction factors:
   STATIC: Ø = 0.75
   SEISMIC: Ø = 1.0
5. Lateral resistance of each pile:
   STATIC: = 30 kips
   SEISMIC: = 40 kips
6. Maximum spacing between piles is shown in the table. Reduce to suit the length of footing.
7. Minimum distance between any two piles is 3'-0".
8. Limit of no splicing rebars = 3 times the bottom thickness of the stem.
9. For soundwall and retaining wall architectural finish or texture, see details elsewhere in project plans.
10. For details not shown and drainage notes, see B3-8
11. Increasing stem thickness not permitted. Maximum distance from tiedown to edge of footing = 0.4 (S).
12. Place footing key concrete against undisturbed material.
13. Shift ⓐ bars, ⓑ bars, and ⓒ bars as required to clear formed hole for tiedown.
14. For Soundwall reinforcement see "Soundwall Masonry Block". Sheets in Standard Plans.

STANDARD DRAWING

FILE NO. xs14-400-2x

APPROVAL DATE July 2011

STATE OF CALIFORNIA DEPARTMENT OF TRANSPORTATION

DIVISION OF ENGINEERING SERVICES

BRIDGE NO. X

POST MILE X

X

RETAINING WALL TYPE 7SWP - DETAILS NO. 2

DS OSD 2147A (ENGLISH STANDARD DRAWING "XS" BORDER REV. (02-02-11)

ORIGINAL SCALE IN INCHES FOR REDUCED PLANS 0 1 2 3

UNIT: X

PROJECT NUMBER & PHASE: X

CONTRACT NO.: X

DISREGARD PRINTS BEARING EARLIER REVISION DATES

REVISION DATES

SHEET X OF X

FILE => $REQUEST

USERNAME => $USER DATE PLOTTED => $DATE TIME PLOTTED => $TIME