SECTION 14 - BEARINGS

14.1 SCOPE

This section contains requirements for the design and selection of structural bearings.

The selection and layout of the bearings shall be consistent with the proper functioning of the bridge, and shall allow for deformations due to temperature and other time dependent causes.

The loads induced in the bearings and structural members depend on the stiffness of the individual elements and the tolerances achieved during fabrication and erection. These influences shall be taken into account when calculating design loads for the elements.

Units used in this section shall be taken as KIP, IN, RAD, ºF and Shore Hardness, unless noted.

14.2 DEFINITIONS

Note: Bearing definitions marked with an * are for informational purposes only and are not covered in these specifications.

Bearing – a structural device that transmits loads while facilitating translation and/or rotation.

*Bronze Bearing – A bearing which displacements or rotations take place by the slip of a bronze surface against a mating surface.

Cotton Duck Reinforcement Pad (CDP) – A pad made from closely spaced layers of elastomer and cotton duck, bonded together during vulcanization.

*Disc Bearing – A bearing which accommodates rotation by deformation of a single elastomeric disc, molded from a urethane compound. It may contain a device for partially confining the disc against lateral expansion.

*Double Cylindrical Bearing – A bearing made from two cylindrical bearings placed on top of each other with their axes at right angles to each other, in order to provide rotation about any horizontal axis.

Fiberglass Reinforced Pad (FRP) – A pad made from discrete layers of elastomer and woven fiberglass, bonded together during vulcanization.

*Fixed Bearing – A bearing which prevents differential longitudinal translation of abutting structure elements. It may or may not provide for differential lateral translation or rotation.

*Knuckle Bearing – A bearing in which a concave metal surface rocks on a convex metal surface to provide rotation capability about any horizontal axis.

Longitudinal – The direction associated with the axis of the main structural trusses or girders in the bridge.

*Metal Rocker or Roller Bearing – A bearing which carries vertical load by direct contact between two metal surfaces and which accommodates movement by rolling of one surface with respect to the other.

Movable Bearing – A bearing that facilitates differential horizontal translation of abutting structural elements in a longitudinal and/or lateral direction. It may or may not provide for rotation.

Plain Elastomeric Pad (PEP) – A pad made exclusively of elastomer.

*Pot Bearing – A bearing which carries vertical load by compression on an elastomeric disc confined in a steel cylinder and which accommodates rotations by deformations of the disc.

PTFE/Elastomeric - A bearing which carries vertical load by contact stresses between a PTFE sheet and a stainless steel mating surface that permits movements by sliding of the PTFE over the stainless steel and accommodates rotation by deformation of the elastomer.

PTFE Sliding Bearing – A bearing which carries vertical load by contact stresses between a PTFE sheet or woven fabric and its mating surface, and which permits movements by sliding of the PTFE over the mating surface.

PTFE/Spherical - A bearing consisting of a PTFE surfaced concave plate and mating stainless steel convex plate which accommodate rotation through sliding of the curved surfaces.

Rotation about the Longitudinal Axis – Rotation about an axis parallel to the longitudinal axis of the bridge.

Rotation about the Transverse Axis – Rotation about an axis parallel to the transverse axis of the bridge.

RMS – Root mean square

Sliding Bearing - A bearing which accommodates movement by slip of one surface over another.

Steel Reinforced Elastomeric Bearing – A bearing made from alternate laminates of steel and elastomer, bonded together during vulcanization.

Translation – Horizontal movement of the bridge in the longitudinal or transverse direction.

Transverse – The horizontal direction normal to the longitudinal axis of the bridge.

14.3 NOTATIONS

A = Plan area of elastomeric bearing (in^2)

B = length of pad if rotation is about its transverse axis, or width of pad if rotation is about its longitudinal axis (in)

D = Diameter of the projection of the loaded surface of the bearing in the horizontal plane (in)

D_d = Diameter of the disc element (in)

d_j = Diameter of the jth hole in an elastomeric bearing

E = Young's modulus (ksi)

E_c = Effective modulus in compression of elastomeric bearing (ksi)

E_s = Young's modulus for steel (ksi)

e = Eccentricity of loading on a bearing (in)

F_{sr} = Allowable fatigue stress range for over 2,000,000 cycles (ksi)

F_y = Yield strength of the least strong steel at the contact surface (ksi)

G = Shear modulus of the elastomer (ksi)

H_m = Maximum horizontal load on the bearing or restraint considering all appropriate load combinations (kip)

h_{ri} = Thickness of ith elastomeric layer in elastomeric bearing (in)

h_{rmax} = Thickness of thickest elastomeric layer in elastomeric bearing (in)

h_{rt} = Total elastomer thickness in an elastomeric bearing (in)

h_s = Thickness of steel laminate in steel-laminated elastomeric bearing (in)

I = Moment of inertia (in^4)

L = Length of a rectangular elastomeric bearing (parallel to longitudinal bridge axis) (in)

M_m = Maximum bending moment (K-in)

n = Number of elastomer layers

P_D = Compressive load due to dead load (kip)

P_{TL} = Compressive load due to live plus dead load (kip)

P_L = Compressive load to due to live load (kip)

P_m = Maximum compressive load considering all appropriate load combinations (kip)

R = Radius of curved sliding surface (in)

R_0 = Radial distance from center of bearing to object, such as an anchor bolt, for which clearance must be provided (in)

S = Shape factor of one layer of an elastomeric bearing

$$= \frac{\text{Plan Area}}{\text{Area of Perimeter Free to Bulge}}$$

$$= \frac{LW}{2h_{rmax}(L+W)} \text{ for rectangular bearings without holes}$$

$$= \frac{D}{4h_{rmax}} \text{ for circular bearings without holes}$$

W = Width of the bearing in the transverse direction (in)

β = Effective angle of friction angle in PTFE bearings = $\tan^{-1}(H_m/P_D)$

Δ_o = Maximum service horizontal displacement of the bridge deck (in)

Δ_s = Maximum shear deformation of the elastomer (in)

δ = Instantaneous compressive deflection of bearing (in)

δ_m = Maximum compressive deflection of bearing (in)

ε = Instantaneous compressive strain of a plain elastomeric pad

ε_i = Instantaneous compressive strain i^{th} elastomer layer of a laminated elastomeric bearing

θ = Component of maximum service rotation in direction of interest on an elastomeric bearing under load for Article 14.6.5.3

θ_D = Maximum rotation due to dead load (rad)

θ_L = Maximum rotation due to live load

$\theta_{m,x}$ = Maximum rotation considering all appropriate load and deformation combinations about transverse axis (rad)

$\theta_{m,z}$ = Maximum rotation considering all appropriate load and deformation combinations about longitudinal axis (rad)

θ_m = Maximum design rotation considering all appropriate load and deformation combinations including live and dead load, bridge movements, and construction tolerances (rad)

μ = Coefficient of friction

σ_D = Average compressive stress due to dead load (ksi)
σ_L = Average compressive stress due to live load (ksi)
σ_{TL} = Average compressive stress due to total dead plus live load (ksi)
σ_m = Maximum average compressive stress (ksi)

14.4 MOVEMENTS AND LOADS

Bearings shall be designed to resist loads and accommodate movements. No damage due to joint or bearing movement shall be permitted under any appropriate load and movement combination.

Translational and rotational movements of the bridge shall be considered in the design of bearings. The sequence of construction shall be considered and all critical combinations of load and movement shall be considered in the design. Rotations about two horizontal axes and the vertical axis shall be considered. The movements shall include those caused by the loads, deformations and displacements caused by creep, shrinkage and thermal effects, and inaccuracies in installation. In all cases, both instantaneous and long-term effects shall be considered, but the influence of impact need not be included. The most adverse combination of movements shall be used for design. Design requirements may be tabulated in a rational form such as shown in Figure 14.4.

14.4.1 Design Requirements

The minimum thermal movements shall be computed
+ from the temperature range defined in Article 3.16 of Division I and the estimated setting temperature. Design loads shall be based on the load combinations and load
+ factors specified in Section 3.

The design rotation, θ_m, for bearings such as elastomeric pads or steel reinforced elastomeric bearings which do not achieve hard contact between metal components shall be taken as the sum of:

- the dead and live load rotations.
- an allowance for uncertainties, which is normally taken as less than 0.005 rad.

+ The design rotation, θ_m, for bearings such as PTFE
+ spherical and PTFE elastomeric which may develop hard contact between metal components shall be taken as the sum of:

- the greater of either the rotations due to all applicable factored loads or the rotation at the service limit state.
- the maximum rotation caused by fabrication and installation tolerances, which shall be taken 0.01 rad unless an approved quality control plan justifies a smaller value.
- an allowance for uncertainties, which shall be taken as 0.01 rad unless an approved quality control plan justifies a smaller value.

In no case shall the sum be less than 0.015 radians. +

14.5 GENERAL REQUIREMENTS FOR BEARINGS

Bearings may be fixed or movable as required for the bridge design. Movable bearings may include guides to control the direction of translation. Fixed and guided bearings shall have lateral strength adequate to resist all applied loads and restrain unwanted translation.

Combinations of different types of fixed or moveable bearings should not be used at the same expansion joint, bent or pier unless the effects of differing deflection and rotational characteristics on the bearings and structure are accounted for in the design.

14.5.1 Load and Movement Capabilities

The movements and loads to be used in the design of the bearing shall be clearly defined on the contract drawings.

14.5.2 Characteristics

The bearing chosen for a particular application must have appropriate load and movement capabilities. Those listed in Table 14.5.2-1 may be used as a guide. Figure 14.5.2-1 may be used as a guide in defining the different bearing systems.

The following terminology shall apply to Table 14.5.2-1:

S = Suitable
U = Unsuitable
L = Suitable for limited applications

Bridge Name or Ref.				
Bearing Identification Mark				
Number of bearings required				
Seating Material	Upper Surface			
	Lower Surface			
Allowable contact pressure (KSI)	Average			
	Edge Load			
Design load effects (KIP)		Vertical	max.	
			perm.	
			min.	
		Transverse		
		Longitudinal		
Translation	Irreversible	Transverse		
		Longitudinal		
	Reversible	Transverse		
		Longitudinal		
Rotation (RAD)	Irreversible	Transverse		
		Longitudinal		
	Reversible	Transverse		
		Longitudinal		
Maximum Bearing dimensions (IN)	Upper surface	Transverse		
		Longitudinal		
	Lower surface	Transverse		
		Longitudinal		
	Overall height			
Tolerable movement of bearing under transient loads (IN)		Vertical		
		Transverse		
		Longitudinal		
Allowable resistance to translation under service load (KIP)		Transverse		
		Longitudinal		
Allowable reistance to rotation under service load (IN-KIP)		Transverse		
		Longitudinal		
Type of attachment to structure and substructure		Transverse		
		Longitudinal		

FIGURE 14.4

Table 14.5.2-1 Bearing Suitability

Type of Bearing	Movement		Rotation about bridge axis inidicated			Resistance to Loads		
	Long	Trans	Trans	Long	Vert	Vert	Long	Trans
Plain Elastomeric Pad	S	S	S	S	L	L	L	L
Fiberglass Reinforced Pad	S	S	S	S	L	L	L	L
Cotton Duck Reinforced Pad	U	U	U	U	U	S	L	L
Steel-reinforced Elastomeric Bearing	S	S	S	S	L	S	L	L
Curved Sliding Spherical Bearing	R	R	S	S	S	S	R	R
PTFE/Elastomeric Bearing	S	S	S	S	S	S	L	L

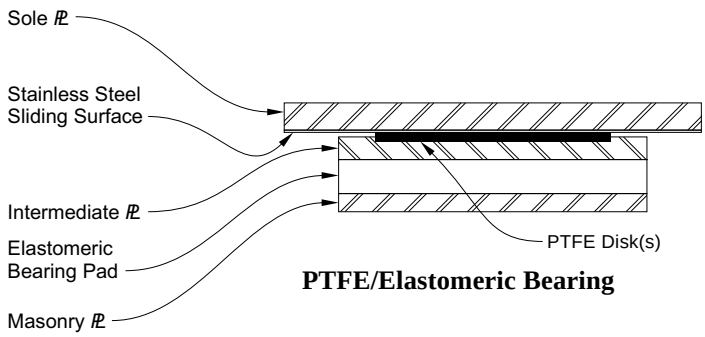

PTFE/Elastomeric Bearing

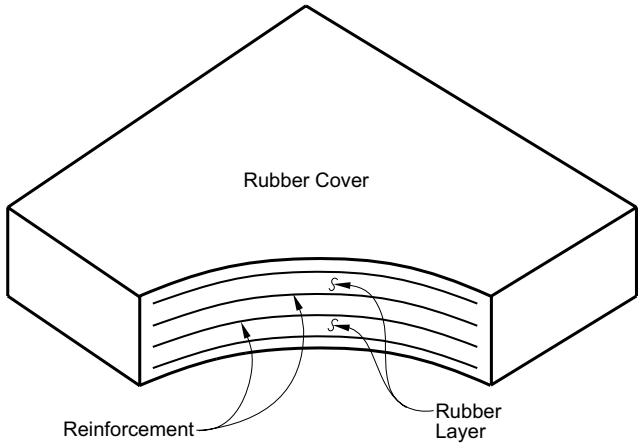

Elastomeric Bearing

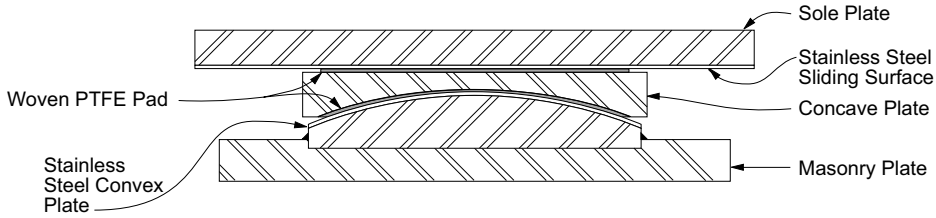

PTFE/Spherical Expansion Bearing (Non-Guided)

FIGURE 14.5.2-1 Typical Bearing Components

R = May be suitable but requires special considerations or additional elements such as sliders or guideways.
Long. = Longitudinal axis
Trans. = Transverse axis
Vert. = Vertical axis

14.5.3 Forces in the Structure Caused by Restraint of Movement at the Bearing

Horizontal forces and moments induced in the bridge by restraint of movement at the bearing shall be taken into account in the design of the bridge and the bearings. They shall be determined using the calculated movements and the bearing characteristics given in Article 14.6.

14.5.3.1 Horizontal Force

Horizontal forces may be induced by sliding friction, rolling friction or deformation of a flexible element in the bearing. The force used for design shall be the largest one applicable.

Sliding friction force shall be computed

$$H_m = \mu P_m \qquad (14.5.3.1\text{-}1)$$

where:

H_m = maximum horizontal load (kip)
μ = coefficient of friction
P_m = maximum compressive load (kip)

The force required to deform an elastomeric element shall be computed as:

$$H_m = GA\Delta_s / h_{rt} \qquad (14.5.3.1\text{-}2)$$

where:

G = Shear modulus of the elastomer (ksi)
A = plan area of elastomeric element or bearing (in^2)
Δ_s = maximum shear deformation of the elastomer (in)
h_{rt} = total elastomer thickness (in)

Rolling forces shall be determined by test.

14.5.3.2 Bending Moment

The bridge substructure and superstructure shall be designed for the largest moment, M_m which can be transferred by the bearing.

For curved sliding bearings without a companion flat sliding surface, M_m shall be estimated by:

$$M_m = \mu P_m R \qquad (14.5.3.2\text{-}1A)$$

and for curved sliding bearings with a companion flat sliding surface, M_m shall be estimated by:

$$M_m = 2\mu P_m R \qquad (14.5.3.2\text{-}1B)$$

where:

M_m = maximum bending moment (K-in)
R = radius of curved sliding surface (in)

For unconfined elastomeric bearings and pads, M_m shall be estimated by:

$$M_m = (0.5 E_c I)\theta_m / h_{rt} \qquad (14.5.3.2\text{-}2)$$

where:

I = moment of inertia of plan shape of bearing (in^4)
E_c = effective modulus of elastomeric bearing in compression (ksi)
θ_m = maximum design rotation (rad)

14.6 SPECIAL DESIGN PROVISIONS FOR BEARINGS

The stress increases permitted for certain load combinations by Table 3.22.1A of this specification shall not apply in the design of bearings.

14.6.1 *Deleted* +

14.6.1.1 *Deleted* +

14.6.1.2 *Deleted* +

14.6.1.3 *Deleted* +

14.6.1.4 *Deleted* +

14.6.2 PTFE Sliding Surfaces

PTFE, polytetrafluorethylene, may be used in sliding surfaces of bridge bearings to accommodate translation or rotation. All PTFE surfaces other than guides shall satisfy the requirements of this section. Curved PTFE surfaces shall also satisfy Article 14.6.3.

14.6.2.1 PTFE Surface

The PTFE surface shall be made from pure virgin PTFE resin satisfying the requirements of ASTM D 4894 or D 4895. It shall be fabricated as unfilled sheet, filled sheet of fabric woven from PTFE and other fibers.

Unfilled sheets shall be made from PTFE resin alone. Filled sheets shall be made from PTFE resin uniformly blended with glass fibers or other chemically inert filler. The maximum filler content shall be 15%.

Sheet PTFE may contain dimples to act as reservoirs for lubricant. Their diameter shall not exceed 0.32-in at the surface of the PTFE and their depth shall be not less than .08-in. and not more than half the thickness of the PTFE. The reservoirs shall be uniformly distributed over the surface area and shall cover more than 20% but less than 30% of it. Lubricant shall be silicone grease which satisfies military specification MIL-S-8660.

Woven fiber PTFE shall be made from pure PTFE fibers. Reinforced woven fiber PTFE shall be made by interweaving high strength fibers, such as glass, with the PTFE in such a way that the reinforcing fibers do not appear on the sliding face of the finished fabric.

14.6.2.2 Mating Surface

The PTFE shall be used in conjunction with a mating surface. Flat and curved mating surfaces shall be stainless steel. Flat surfaces shall be a minimum #8 mirror finish Type 304 stainless steel and shall conform to ASTM A167/A264. Curved stainless steel surfaces shall not exceed 16 micro in RMS and shall conform to ASTM designation A 167/A264, Type 304. The mating surface shall be large enough to cover the PTFE at all times.

14.6.2.3 Minimum Thickness Requirements

14.6.2.3.1 PTFE

For all applications, the thickness of the PTFE shall be at least $^1/_{16}$–in. after compression. Recessed sheet PTFE shall be at least ¼-in. thick. Woven fabric PTFE which is mechanically interlocked over a metallic substrate shall have a minimum thickness $^1/_{16}$-in. and a maximum thickness of $^1/_8$-in. over the highest point of the substrate.

14.6.2.3.2 Stainless Steel Mating Surfaces

The thickness of the stainless steel mating surface shall be at least $^1/_8$-in.

Backing plate requirements are specified in Article 14.6.2.6.2.

14.6.2.4 Contact Pressure

The maximum contact stress, σ_m, between the PTFE and the mating surface shall be determined with the maximum compressive load, P_m, using the nominal area.

The average contact stress shall be computed by dividing the load by the projection of the contact area onto a plane perpendicular to the direction of the load. The contact stress at the edge shall be computed by taking into account the maximum moment, M_m, transferred by the bearing assuming a linear distribution of stress across the PTFE.

Stresses shall not exceed those given in Table 14.6.2.4-1. Permissible stresses for intermediate filler contents shall be obtained by linear interpolation within Table 14.6.2.4-1.

14.6.2.5 Coefficient of Friction

The design coefficient of friction of the PTFE sliding surface shall be determined from Table 14.6.2.5-1. Intermediate values may be determined by interpolation. The coefficient of friction shall be determined by using the stress level associated with the maximum compressive load, P_m. Lesser values of the coefficient of friction may be used if verified by tests.

Table 14.6.2.4-1 Limits on Contact Stress for PTFE

Material	Ave. Contact Stress (KSI) Dead Load	Ave. Contact Stress (KSI) All Loads	Edge Contact Stress (KSI) Dead Load	Edge Contact Stress (KSI) All Loads
Unconfined PTFE:				
Unfilled sheets	1.5	2.5	2.0	3.0
Filled sheets - These figures are for maximum filler content	3.0	4.5	3.5	5.5
Confined sheet PTFE	3.0	4.5	3.5	5.5
Woven PTFE over a metallic substrate	3.0	4.5	3.5	5.5
Reinforced woven PTFE over a metallic substate	4.0	5.5	4.5	7.0

Table 14.6.2.5-1 Design Coefficients of Friction

Type of PTFE	Pressure (psi)	Coefficient of Friction 500	1000	2000	>3000
	Temperature (°F)				
Dimpled Lubricated	68	0.04	0.03	0.025	0.02
	-13	0.06	0.045	0.04	0.03
	-49	0.10	0.075	0.06	0.05
Unfilled	68	0.08	0.07	0.05	0.03
	-13	0.20	0.18	0.13	0.10
	-49	0.20	0.18	0.13	0.10
Filled	68	0.24	0.17	0.09	0.06
	-13	0.44	0.32	0.25	0.20
	-49	0.65	0.55	0.45	0.35
Woven	68	0.08	0.07	0.06	0.045
	-13	0.20	0.18	0.13	0.10
	-49	0.20	0.18	0.13	0.10

Where friction is required to resist applied loads, the design coefficient of friction under dynamic loading may be taken as not more than 10% of the value listed in Table 14.6.2.5-1 for the bearing stress and PTFE type.

The coefficients of friction in Table 14.6.2.5-1 are based on a #8 mirror finish mating surface. Coefficients of friction for rougher surface finishes must be established by test results in accordance with Division II, Section 18 of the AASHTO Standard Specifications for Highway Bridges, Sixteenth Edition.

14.6.2.6 Attachment

14.6.2.6.1 PTFE

Sheet PTFE confined in a recess in a rigid metal backing plate for one half its thickness shall be bonded.

Sheet PTFE which is not confined shall be bonded by an approved method to a metal surface or an elastomeric layer with a Shore A durometer hardness of at least 90. Woven PTFE on a metallic substrate shall be attached to the metallic substrate by mechanical interlocking which can resist a shear force no less than 0.10 times the applied compressive force.

14.6.2.6.2 Mating Surface

The mating surface for flat sliding shall be attached to a backing plate by welding in such a way that it remains flat and in full contact with its backing plate throughout its service life. The weld shall be detailed to form an effective moisture seal around the entire perimeter of the mating surface so that interface corrosion cannot occur. The attachment shall be capable of resisting the maximum friction force which can be developed by the bear-

ing under service loads. The welds used for the attachment shall be clear of the contact and sliding area of the PTFE surface.

14.6.3 Bearings with Curved Sliding Surfaces

Bearings with curved sliding surfaces shall consist of two metal parts with matching curved surfaces and a low friction sliding interface. The curved surfaces shall be spherical. The material properties, characteristics, and frictional properties of the sliding interface shall satisfy the requirements of either Article 14.6.2 or Article 14.6.7.

14.6.3.1 Geometric Requirements

The radius of the curved surface shall be large enough to assure that the maximum average bearing stress, σ_m, on the horizontal projected area of the bearing at the maximum load, P_m, shall satisfy the average stress requirements of Article 14.6.2.4. The maximum average bearing stress shall be taken as

- For spherical Bearings

$$\sigma_m = \frac{4P_m}{\pi D^2} \qquad (14.6.3.1\text{-}2)$$

where

D = diameter of the projection of the loaded surface of the bearing in the horizontal plane (in)

The two surfaces of a sliding interface shall have equal radii.

14.6.3.2 Resistance to Lateral Load

In bearings which are required to resist horizontal loads, either an external restraint system shall be provided, or for a spherical surface the horizontal load shall be limited to:

$$H_m \le \pi R^2 \sigma_{PTFE} \sin^2(\Psi - \beta - \theta_m)\sin\beta \qquad (14.6.3.2\text{-}2)$$

where

$$\beta = \tan^{-1}\left(\frac{H_m}{P_D}\right) \qquad (14.6.3.2\text{-}3)$$

and

$$\Psi = \sin^{-1}\left(\frac{L}{2R}\right) \qquad (14.6.3.2\text{-}4)$$

and:

H_m = maximum horizontal load.
L = projected length of the sliding surface perpendicular to the rotation axis.
P_D = compressive load due to permanent loads.

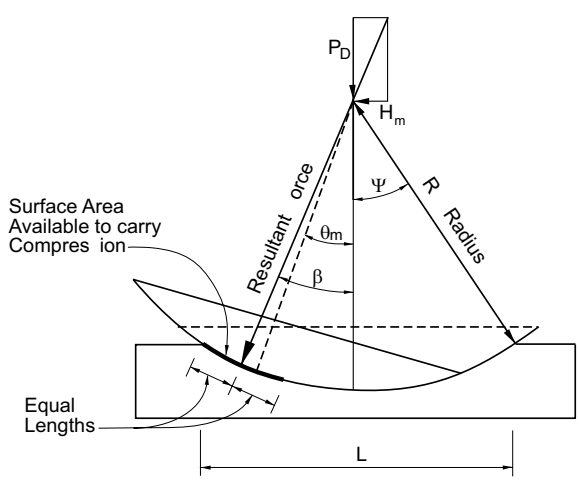

FIGURE 14.6.3.2-1

R = radius of the curved sliding surface.
β = angle between the vertical and applied loads.
θ_m = maximum design rotation angle. See Article 14.4.1.
σ_{PTFE} = maximum average contact stress permitted on the PTFE by Table 14.6.2.4-1.
Ψ = subtended semi-angle of the curved surface.

14.6.4 *Deleted*

14.6.4.1 *Deleted*

14.6.4.2 *Deleted*

14.6.4.3 *Deleted*

14.6.4.4 *Deleted*

14.6.4.5 *Deleted*

14.6.4.6 *Deleted*

14.6.4.7 *Deleted*

14.6.4.8 *Deleted*

14.6.5 Steel Reinforced Elastomeric Bearings - Method B

14.6.5.1 General

Steel reinforced elastomeric bearings shall consist of alternate layers of steel reinforcement and elastomer, bonded together. Tapered elastomer layers shall not be used. All internal layers of elastomer shall be of the same thickness. The top and bottom cover layers shall be no thicker than 70% of the internal layers. In addition to any internal reinforcement, bearings may have external steel load plates bonded to the upper or lower elastomer layers or both.

14.6.5.2 Material Properties

The elastomer shall have a shear modulus between 0.095 and 0.120 ksi and a nominal hardness between 50 and 60 on the Shore A scale at 70ºF.

The shear modulus of the elastomer at 70°F and 0°F shall be used as the basis for design, unless site temperatures warrant lower temperatures. The creep deflection relative to the instantaneous deflection shall be obtained from Table 14.6.5.2-1. All bearings shall be manufactured from elastomer grade No.3.

Table 14.6.5.2-1 Elastomer properties at different hardnesses.

Hardness (Shore 'A')	50	60	70
$\frac{\text{Creep deflection at 25 yrs}}{\text{Instantaneous deflection}}$	25%	35%	45%

14.6.5.3 Design Requirements

14.6.5.3.1 Scope

Bearings designed by the provisions of this section shall be subsequently tested in accordance with the requirements for steel reinforced elastomeric bearings of Article 18.7 of Division II of the AASHTO Standard Specifications for Highway Bridges, Sixteenth Edition. Steel reinforced elastomeric bearings should only be designed by these provisions when the provisions of Article 14.6.6 are exceeded.

14.6.5.3.2 Compressive Stress

In any bearing layer, the average compressive stress (ksi) shall satisfy the following:

- for bearings subject to shear deformation

$$\begin{aligned} \sigma_{TL} &\le 1.6\,\text{KSI} \\ \sigma_{TL} &\le 1.66\,\text{GS} \\ \sigma_{L} &\le 0.66\,\text{GS} \end{aligned} \qquad (14.6.5.3.2\text{-}1)$$

- for bearings fixed against shear deformation

$$\begin{aligned} \sigma_{TL} &\le 1.75\,\text{KSI} \\ \sigma_{TL} &\le 2.00\,\text{GS} \\ \sigma_{L} &\le 1.00\,\text{GS} \end{aligned} \qquad (14.6.5.3.2\text{-}2)$$

where
σ_L = average compressive stress due to the live load (KSI)
σ_{TL} = Average compressive stress due to total dead

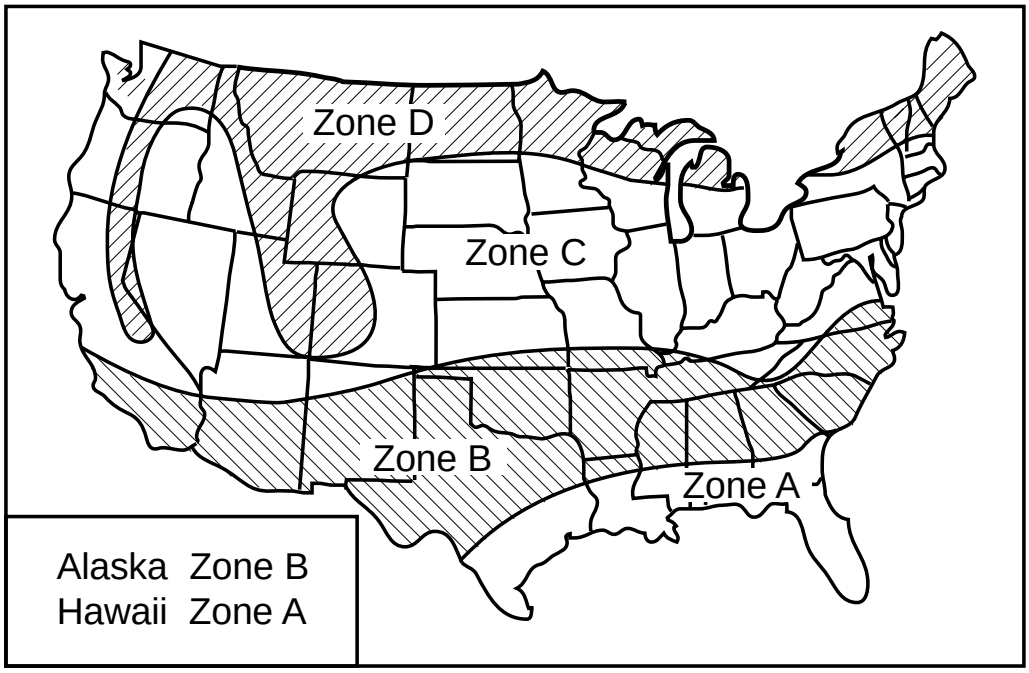

FIGURE 14.6.5.2-1 Map of Low Temperature Zones

plus live load (KSI)
G = shear modulus of elastomer (KSI)
S = shape factor of the thickest layer of the bearing

14.6.5.3.3 Compressive Deflection

Deflections due to total load and to live load alone shall be considered separately.

Instantaneous deflection shall be calculated as follows:

$$\delta = \Sigma \varepsilon_i h_{ri} \qquad (14.6.5.3.3\text{-}1)$$

where

ε_i = instantaneous compressive strain in the ith elastomer layer of a laminated elastomeric bearing
h_{ri} = thickness of ith elastomeric layer in elastomeric bearing (in)

Values for ε_i shall be determined from test results or from stress vs. strain curves found in the Bridge Memos
+ to Designers. The effects of creep of the elastomer shall
+ be added to the instantaneous deflection when considering long-term deflections. They should be computed from information relevant to the elastomeric compound used. In the absence of material-specific data, the values given in Article 14.6.5.2 shall be used.

14.6.5.3.4 Shear

The horizontal movement of the bridge superstructure, Δ_0, shall be taken as the maximum possible displacement caused by creep, shrinkage, post-tensioning, combined with thermal effects computed in accordance with this Specification. The maximum shear deformation of the bearing, Δ_s, shall be taken as Δ_0, modified to account for the pier flexibility and construction procedures. If a low friction sliding surface is installed, Δ_s need not be taken larger than than the deformation corresponding to first slip.

The bearing shall be designed so that

$$h_{rt} \geq 2\Delta_s \qquad (14.6.5.3.4\text{-}1)$$

where

h_{rt} = total elastomeric thickness (in)
Δ_s = maximum service shear deformation of the elastomer (in)

14.6.5.3.5 Combined Compression and

Rotation

Rotations shall be taken as the maximum possible difference in slope between the top and bottom surfaces of the bearing. They shall include the effects of initial lack-of-parallelism and subsequent girder end rotation due to imposed loads and movements. Bearings shall be designed so that uplift does not occur under any combination of loads and corresponding rotation.

All rectangular bearings shall satisfy

$$\sigma_{TL} \geq 1.0\,GS\left(\frac{\theta_m}{n}\right)\left(\frac{B}{h_{ri}}\right)^2 \qquad (14.6.5.3.5\text{-}1)$$

A rectangular bearing subject to shear deformation shall also satisfy Equation 14.6.5.3.5-2; those fixed against shear deformation shall also satisfy Equation 14.6.5.3.5-3.

$$\sigma_{TL} \leq 1.875GS\left(1-0.200\left(\frac{\theta_m}{n}\right)\left(\frac{B}{h_{ri}}\right)^2\right) \qquad (14.6.5.3.5\text{-}2)$$

$$\sigma_{TL} \leq 2.250GS\left(1-0.167\left(\frac{\theta_m}{n}\right)\left(\frac{B}{h_{ri}}\right)^2\right) \qquad (14.6.5.3.5\text{-}3)$$

where

- B = length of pad if rotation is about its transverse axis, or width of pad if rotation is about its longitudinal axis (in)
- G = shear modulus of elastomer (ksi)
- h_{rt} = thickness of the ith layer of elastomer (in)
- n = number of layers of elastomer
- S = shape factor of the thickest layer of the bearing
- θ_m = component of maximum service rotation in direction of interest (rad)
- σ_{TL} = average compressive stress due to the total dead plus live load (ksi)

All circular bearings shall satisfy

$$\sigma_{TL} > 0.75GS\left(\frac{\theta_m}{n}\right)\left(\frac{D}{h_{ri}}\right)^2 \qquad (14.6.5.3.5\text{-}4)$$

A circular bearing subject to shear deformation shall also satisfy Equation 14.6.5.3.5-5; those fixed against shear deformation shall also satisfy Equation 14.6.5.3.5-6.

$$\sigma_{TL} < 2.5GS\left(1-0.15\left(\frac{\theta_m}{n}\right)\left(\frac{D}{h_{ri}}\right)^2\right) \qquad (14.6.5.3.5\text{-}5)$$

$$\sigma_{TL} < 3.0GS\left(1-0.125\left(\frac{\theta_m}{n}\right)\left(\frac{D}{h_{ri}}\right)^2\right) \qquad (14.6.5.3.5\text{-}6)$$

where

D = diameter of pad (in)

14.6.5.3.6 Stability

Bearings shall be proportioned to avoid instability. If

$$\frac{3.84(h_{rt}/L)}{S\sqrt{1+2L/W}} \leq \frac{2.67}{S(S+2)(1+L/4W)} \qquad (14.6.5.3.6\text{-}1)$$

the bearing is stable for all allowable loads in this specification and no further consideration of stability is required.

For rectangular bearings not satisfying equation 14.6.5.3.6-1, the average compressive stress due to dead and live load shall satisfy:

- If the bridge deck is free to translate horizontally

$$\sigma_{TL} \leq \frac{G}{\left(\frac{3.84(h_{rt}/L)}{S\sqrt{1+2L/W}} - \frac{2.67}{S(S+2)(1+L/4W)}\right)} \qquad (14.6.5.3.6\text{-}2)$$

- If the bridge deck is not free to translate horizontally

$$\sigma_{TL} \leq \frac{G}{\left(\frac{1.92(h_{rt}/L)}{S\sqrt{1+2L/W}} - \frac{2.67}{S(S+2)(1+L/4W)}\right)} \qquad (14.6.5.3.6\text{-}3)$$

If L is greater than W for a rectangular bearing, stability shall be checked by the above formulas with L and W interchanged.

For circular bearings, stability may be evaluated by

using the equations for a square bearing with W = L = 0.8 D.

14.6.5.3.7 Reinforcement

The thickness of the reinforcement, h_s, shall satisfy the requirements

$$h_s > \frac{3.0 h_{r\,max} s_{TL}}{F_y} \qquad (14.6.5.3.7\text{-}1)$$

and

$$h_s > \frac{2.0 h_{r\,max} s_L}{F_{sr}} \qquad (14.6.5.3.7\text{-}2)$$

where

h_s = thickness of steel laminate (in)
F_{sr} = allowable fatigue stress range for over 2,000,000 cycles (ksi)

If holes exist in the reinforcement, the minimum thickness shall be increased by a factor of 2 (gross width)/(net width).

14.6.6 Elastomeric Pads and Steel Reinforced Elastomeric Bearings – Method A

14.6.6.1 General

This section of the specification covers the design of plain elastomeric pads, PEP, pads reinforced with discrete layers of fiberglass, FGP, and pads reinforced with closely spaced layers of cotton duck, CDP and steel reinforced elastomeric bearings. Layer thicknesses in FGP may be different from one another. For steel reinforced elastomeric bearings designed in accordance with the provisions of this section, internal layers shall be of the same thickness and cover layers shall be no more than 70% of thickness of internal layers.

14.6.6.2 Material Properties

The materials for plain elastomeric pads, fiberglass + reinforced pads and steel reinforced elastomeric bearings + shall satisfy the requirements of Article 14.6.5.2. Bearing pads reinforced with closely spaced layers of cotton duck + shall have a shear modulus between 0.095 and 0.250 ksi + and a nominal hardness between 50 and 70 on the shore + "A" scale. + +

14.6.6.3 Design Requirements

14.6.6.3.1 Scope

Plain elastomeric pads, fiberglass reinforced pads and cotton duck reinforced pads shall be designed in accordance with the provisions of this Article. Steel reinforced elastomeric bearings designed in accordance with the provisions of this article shall qualify for the test requirements appropriate for elastomeric pads.

The provisions for FGP apply only to pads where the fiberglass is placed in double layers $^1/_8$-in. apart.

The physical properties of neoprene used in these bearings shall conform to the following ASTM requirements, with modifications as noted: +

Neoprene: D4014

Modifications:

(1) The Shore A Durometer hardness shall lie within the limits specified in Article 14.6.6.2.
(2) Samples for compression set tests shall be prepared using a Type 2 die.

14.6.6.3.2 Compressive Stress

The average compressive stress, σ_{TL}, in any layer shall satisfy

- for PEP, $\sigma_{TL} \leq 0.80$ ksi, and $\sigma_{TL} \leq 0.55GS$
- for FGP, $\sigma_{TL} \leq 0.80$ ksi, and $\sigma_{TL} \leq 1.00GS$
- for CDP, $\sigma_{TL} \leq 1.50$ ksi

In FGP, the values of S used shall be that for the greatest distance between the mid-point of double reinforcement layers at the top and bottom of the elastomer layer.

For steel reinforced elastomeric bearings designed in accordance with the provisions of this article $\sigma_{TL} \leq 1.00$ ksi, and $\sigma_{TL} \leq 1.0$ GS where the value of S used shall be that for the thickest layer of the bearing. The stress limits may be increased by 10 percent where shear deformation

is prevented.

14.6.6.3.3 Compressive Deflection

The provisions of Article 14.6.5.3.3 shall apply.

14.6.6.3.4 Shear

The horizontal bridge movement shall be computed in accordance with Article 14.4. The maximum shear deformation of the pad, Δ_s, shall be taken as the horizontal bridge movement, reduced to account for the pier flexibility and modified for construction procedures. If a low friction sliding surface is used, Δ_s need not be taken larger than the deformation corresponding to first slip.

The pad shall be designed as follows:

h_{rt} $2\Delta_s$ for PEP, FGP and steel reinforced elastomeric bearings

h_{rt} $10\,\Delta_s$ for CDP (14.6.6.3.4-1)

14.6.6.3.5 Rotation

The rotation about each axis shall be taken as the maximum possible rotation between the top and bottom of the pad caused by initial lack of parallelism and girder end rotation. The shape factor of CDP shall be defined as 100 for use in equations 14.6.6.6.3.5-1 and 14.6.6.3.5-2. They shall satisfy:

- for rectangular pads

or

$$\sigma_{TL} \geq 0.5GS\left(\frac{W}{h_{rt}}\right)^2 \theta_{m,z} \qquad (14.6.6.3.5\text{-}1)$$

- for circular pads

$$\sigma_{TL} \geq 0.375GS\left(\frac{D}{h_{rt}}\right)^2 \theta_m \qquad (14.6.6.3.5\text{-}2)$$

14.6.6.3.6 Stability

To ensure stability, the total thickness of pad shall not exceed the least of L/3, W/3, or D/4.

14.6.6.3.7 Reinforcement

The reinforcement in FGP shall be fiberglass with a failure strength in each direction of at least 2.2 h_{ri} K/in of width. For the purpose of this article, if the layers of elastomer are of different thickness, h_{ri} shall be taken as the mean thickness of the two layers of the elastomer bonded to the reinforcement. If the fiberglass reinforcement contains holes, its strength shall be increased over the minimum value specified above by two times the gross width divided by net width.

Reinforcement for steel reinforced elastomeric bearings designed in accordance with the provisions of this article shall conform to the requirements of Article 14.6.5.3.7.

14.6.6.4 Resistance to Deformation

The shear force on the structure induced by deformation of the elastomer shall be based on a G value not less than that of the elastomer at 0ºF. Effects of relaxation shall be ignored.

If the design shear force, H_m, due to pad deformation exceeds one-fifth of the minimum vertical force, the pad shall be secured against horizontal movement. +

The pad shall not be permitted to sustain uplift forces.

14.6.7 *Deleted*

14.6.7.1 *Deleted* +

14.6.7.2 *Deleted* +

14.6.7.3 *Deleted* +

14.6.7.4 *Deleted* +

14.6.8 *Deleted* +

14.6.8.1 *Deleted* +

14.6.8.2 *Deleted* +

14.6.8.3 *Deleted* +

+ **14.6.8.4** *Deleted*

+ **14.6.8.5** *Deleted*

+ **14.6.8.6** *Deleted*

+

14.6.9 Guides and Restraints

14.6.9.1 General

Guides may be used to prevent movement in one direction. Restraints may be used to permit only limited movement in one or more directions. Guides and restraints shall have a low-friction material at their sliding contact surfaces.

14.6.9.2 Design Loads

The guide or restraint shall be designed using the maximum load combinations for the larger of

- the horizontal design load, or
- 10% of the maximum vertical load acting on all the bearings at the bent divided by the number of guided bearings at the bent.

14.6.9.3 Materials

For steel bearings, the guide or restraint shall be made from steel conforming to AASHTO M 270 (ASTM A 709) Grades 36, 50 or 50W, or stainless steel conforming to ASTM A 240.

The low-friction interface material shall be approved by the Engineer.

14.6.9.4 Geometric Requirements

Guides shall be parallel, long enough to accommodate the full design displacement of the bearing in the sliding direction, and shall permit a minimum of $^1/_{32}$-in. and a maximum of $^1/_{16}$-in. free slip in the restrained direction. Guides shall be designed to avoid binding under all design loads and displacements, including rotations.

14.6.9.5 Design Basis

14.6.9.5.1 Load Location

The horizontal load acting on the guide or restraint shall be assumed to act at the centroid of the low-friction interface material. Design of the connection between the guide or restraint and the body of the bearing system shall take into account both shear and overturning moment.

14.6.9.5.2 Contact stress

The contact stress on the low-friction material shall not exceed that recommended by the manufacturer. For PTFE, the stresses due to the maximum loads, P_m and H_m, shall not exceed those given in Table 14.6.2.4.1 under sustained loading or 1.25 times those stresses for short-term loading.

14.6.9.6 Attachment of Low-Friction Material

The low-friction material shall be attached by at least two of the following three methods:

- mechanical fastening
- bonding
- mechanical interlocking with a metal substrate.

14.6.10 Other Bearing System

Bearing systems made from components not described in Articles 14.6.1 through 14.6.8 may be used, subject to the approval of the Engineer and Bearing Technical Specialist. Such bearings shall be adequate to resist the + forces and deformations imposed on them without material distress and without inducing deformations large + enough to threaten their proper functioning. +

The dimensions of the bearing shall be chosen to provide for adequate movements at all times. The materials used shall have sufficient strength, stiffness, and resistance to creep and decay to ensure the proper functioning of the bearing throughout the design life of the bridge.

The Engineer shall determine the tests which the bearing must satisfy. The tests shall be designed to demonstrate any potential weakness in the system under individual compression, shear or rotational loading or

combinations thereof. Testing under sustained or cyclic loading shall be required.

14.7 LOAD PLATES AND ANCHORAGE FOR BEARINGS

14.7.1 Plates for Load Distribution

The bearing, together with any additional plates, shall be designed so that

- the combined system is stiff enough to prevent distortions of the bearing which would impair its proper functioning;
- the stresses imposed on the supporting structure satisfy the limits specified by the Engineer. Allowable stresses on concrete and grout beds shall be assumed to be based on the maximum compressive load, P_m, on the bearing;
- the bearing can be replaced within the jacking height limits specified by the Engineer without damage to the bearing, distribution plates or supporting structure. If no limit is given, a height of $^3/_8$ in. shall be used.

Computations of the strength of steel components and beam stiffener requirements of steel girders shall be made in conformance with Section 10 of Division I of these specifications.

In lieu of a more precise analysis, the load from a bearing fully supported by a grout bed may be assumed to spread out at a slope of 1.5:1, horizontal to vertical, from the edge of the smallest element of the bearing which carries the compressive load.

14.7.2 Tapered Plates

If, under full dead load at the mean annual temperature for the bridge site, the inclination of the underside of the girder to the horizontal exceeds 0.01 rad, a tapered plate shall be used in order to provide a level load surface to be placed on the bearing.

14.7.3 Anchorage

All load distribution plates and all bearings with external steel plates shall be positively secured to their supports by bolting or welding.

All girders shall be positively located on their supporting bearings by a connection which can resist the horizontal forces which may be imposed on it. Separation of bearing components shall not be permitted. A connection, adequate to resist the least favorable combination of loads, shall be installed wherever necessary to prevent separation.

14.8 CORROSION PROTECTION

All exposed steel parts of bearings not made from stainless steel shall be protected against corrosion by zinc metallization, hot-dip galvanizing or a paint system approved by the Engineer. A combination of zinc metallization or hot-dip galvanizing and a paint system may be used.

SECTION 14 - BEARINGS

14.1 SCOPE

This section contains requirements for the design and selection of structural bearings.

The selection and layout of the bearings shall be consistent with the proper functioning of the bridge, and shall allow for deformations due to temperature and other time dependent causes.

The loads induced in the bearings and structural members depend on the stiffness of the individual elements and the tolerances achieved during fabrication and erection. These influences shall be taken into account when calculating design loads for the elements.

Units used in this section shall be taken as KIP, IN, RAD, ºF and Shore Hardness, unless noted.

14.2 DEFINITIONS

Note: Bearing definitions marked with an * are for informational purposes only and are not covered in these specifications.

Bearing – a structural device that transmits loads while facilitating translation and/or rotation.

*Bronze Bearing – A bearing which displacements or rotations take place by the slip of a bronze surface against a mating surface.

Cotton Duck Reinforcement Pad (CDP) – A pad made from closely spaced layers of elastomer and cotton duck, bonded together during vulcanization.

*Disc Bearing – A bearing which accommodates rotation by deformation of a single elastomeric disc, molded from a urethane compound. It may contain a device for partially confining the disc against lateral expansion.

*Double Cylindrical Bearing – A bearing made from two cylindrical bearings placed on top of each other with their axes at right angles to each other, in order to provide rotation about any horizontal axis.

Fiberglass Reinforced Pad (FRP) – A pad made from discrete layers of elastomer and woven fiberglass, bonded together during vulcanization.

*Fixed Bearing – A bearing which prevents differential longitudinal translation of abutting structure elements. It may or may not provide for differential lateral translation or rotation.

*Knuckle Bearing – A bearing in which a concave metal surface rocks on a convex metal surface to provide rotation capability about any horizontal axis.

Longitudinal – The direction associated with the axis of the main structural trusses or girders in the bridge.

*Metal Rocker or Roller Bearing – A bearing which carries vertical load by direct contact between two metal surfaces and which accommodates movement by rolling of one surface with respect to the other.

Movable Bearing – A bearing that facilitates differential horizontal translation of abutting structural elements in a longitudinal and/or lateral direction. It may or may not provide for rotation.

Plain Elastomeric Pad (PEP) – A pad made exclusively of elastomer.

*Pot Bearing – A bearing which carries vertical load by compression on an elastomeric disc confined in a steel cylinder and which accommodates rotations by deformations of the disc.

PTFE/Elastomeric - A bearing which carries vertical load by contact stresses between a PTFE sheet and a stainless steel mating surface that permits movements by sliding of the PTFE over the stainless steel and accommodates rotation by deformation of the elastomer.

PTFE Sliding Bearing – A bearing which carries vertical load by contact stresses between a PTFE sheet or woven fabric and its mating surface, and which permits movements by sliding of the PTFE over the mating surface.

PTFE/Spherical - A bearing consisting of a PTFE surfaced concave plate and mating stainless steel convex plate which accommodate rotation through sliding of the curved surfaces.

Rotation about the Longitudinal Axis – Rotation about an axis parallel to the longitudinal axis of the bridge.

Rotation about the Transverse Axis – Rotation about an axis parallel to the transverse axis of the bridge.

RMS – Root mean square

Sliding Bearing - A bearing which accommodates movement by slip of one surface over another.

Steel Reinforced Elastomeric Bearing – A bearing made from alternate laminates of steel and elastomer, bonded together during vulcanization.

Translation – Horizontal movement of the bridge in the longitudinal or transverse direction.

Transverse – The horizontal direction normal to the longitudinal axis of the bridge.

14.3 NOTATIONS

A = Plan area of elastomeric bearing (in^2)

B = length of pad if rotation is about its transverse axis, or width of pad if rotation is about its longitudinal axis (in)

D = Diameter of the projection of the loaded surface of the bearing in the horizontal plane (in)

D_d = Diameter of the disc element (in)

d_j = Diameter of the jth hole in an elastomeric bearing

E = Young's modulus (ksi)

E_c = Effective modulus in compression of elastomeric bearing (ksi)

E_s = Young's modulus for steel (ksi)

e = Eccentricity of loading on a bearing (in)

F_{sr} = Allowable fatigue stress range for over 2,000,000 cycles (ksi)

F_y = Yield strength of the least strong steel at the contact surface (ksi)

G = Shear modulus of the elastomer (ksi)

H_m = Maximum horizontal load on the bearing or restraint considering all appropriate load combinations (kip)

h_{ri} = Thickness of ith elastomeric layer in elastomeric bearing (in)

h_{rmax} = Thickness of thickest elastomeric layer in elastomeric bearing (in)

h_{rt} = Total elastomer thickness in an elastomeric bearing (in)

h_s = Thickness of steel laminate in steel-laminated elastomeric bearing (in)

I = Moment of inertia (in^4)

L = Length of a rectangular elastomeric bearing (parallel to longitudinal bridge axis) (in)

M_m = Maximum bending moment (K-in)

n = Number of elastomer layers

P_D = Compressive load due to dead load (kip)

P_{TL} = Compressive load due to live plus dead load (kip)

P_L = Compressive load to due to live load (kip)

P_m = Maximum compressive load considering all appropriate load combinations (kip)

R = Radius of curved sliding surface (in)

R_0 = Radial distance from center of bearing to object, such as an anchor bolt, for which clearance must be provided (in)

S = Shape factor of one layer of an elastomeric bearing

$$= \frac{\text{Plan Area}}{\text{Area of Perimeter Free to Bulge}}$$

$$= \frac{LW}{2h_{rmax}(L+W)} \text{ for rectangular bearings without holes}$$

$$= \frac{D}{4h_{rmax}} \text{ for circular bearings without holes}$$

W = Width of the bearing in the transverse direction (in)

β = Effective angle of friction angle in PTFE bearings = $\tan^{-1}(H_m/P_D)$

Δ_o = Maximum service horizontal displacement of the bridge deck (in)

Δ_s = Maximum shear deformation of the elastomer (in)

δ = Instantaneous compressive deflection of bearing (in)

δ_m = Maximum compressive deflection of bearing (in)

ε = Instantaneous compressive strain of a plain elastomeric pad

ε_i = Instantaneous compressive strain i^{th} elastomer layer of a laminated elastomeric bearing

θ = Component of maximum service rotation in direction of interest on an elastomeric bearing under load for Article 14.6.5.3

θ_D = Maximum rotation due to dead load (rad)

θ_L = Maximum rotation due to live load

$\theta_{m,x}$ = Maximum rotation considering all appropriate load and deformation combinations about transverse axis (rad)

$\theta_{m,z}$ = Maximum rotation considering all appropriate load and deformation combinations about longitudinal axis (rad)

θ_m = Maximum design rotation considering all appropriate load and deformation combinations including live and dead load, bridge movements, and construction tolerances (rad)

μ = Coefficient of friction

σ_D = Average compressive stress due to dead load (ksi)
σ_L = Average compressive stress due to live load (ksi)
σ_{TL} = Average compressive stress due to total dead plus live load (ksi)
σ_m = Maximum average compressive stress (ksi)

14.4 MOVEMENTS AND LOADS

Bearings shall be designed to resist loads and accommodate movements. No damage due to joint or bearing movement shall be permitted under any appropriate load and movement combination.

Translational and rotational movements of the bridge shall be considered in the design of bearings. The sequence of construction shall be considered and all critical combinations of load and movement shall be considered in the design. Rotations about two horizontal axes and the vertical axis shall be considered. The movements shall include those caused by the loads, deformations and displacements caused by creep, shrinkage and thermal effects, and inaccuracies in installation. In all cases, both instantaneous and long-term effects shall be considered, but the influence of impact need not be included. The most adverse combination of movements shall be used for design. Design requirements may be tabulated in a rational form such as shown in Figure 14.4.

14.4.1 Design Requirements

The minimum thermal movements shall be computed
+ from the temperature range defined in Article 3.16 of Division I and the estimated setting temperature. Design loads shall be based on the load combinations and load
+ factors specified in Section 3.

The design rotation, θ_m, for bearings such as elastomeric pads or steel reinforced elastomeric bearings which do not achieve hard contact between metal components shall be taken as the sum of:

- the dead and live load rotations.
- an allowance for uncertainties, which is normally taken as less than 0.005 rad.

+ The design rotation, θ_m, for bearings such as PTFE
+ spherical and PTFE elastomeric which may develop hard contact between metal components shall be taken as the sum of:

- the greater of either the rotations due to all applicable factored loads or the rotation at the service limit state.
- the maximum rotation caused by fabrication and installation tolerances, which shall be taken 0.01 rad unless an approved quality control plan justifies a smaller value.
- an allowance for uncertainties, which shall be taken as 0.01 rad unless an approved quality control plan justifies a smaller value.

In no case shall the sum be less than 0.015 radians. +

14.5 GENERAL REQUIREMENTS FOR BEARINGS

Bearings may be fixed or movable as required for the bridge design. Movable bearings may include guides to control the direction of translation. Fixed and guided bearings shall have lateral strength adequate to resist all applied loads and restrain unwanted translation.

Combinations of different types of fixed or moveable bearings should not be used at the same expansion joint, bent or pier unless the effects of differing deflection and rotational characteristics on the bearings and structure are accounted for in the design.

14.5.1 Load and Movement Capabilities

The movements and loads to be used in the design of the bearing shall be clearly defined on the contract drawings.

14.5.2 Characteristics

The bearing chosen for a particular application must have appropriate load and movement capabilities. Those listed in Table 14.5.2-1 may be used as a guide. Figure 14.5.2-1 may be used as a guide in defining the different bearing systems.

The following terminology shall apply to Table 14.5.2-1:

S = Suitable
U = Unsuitable
L = Suitable for limited applications

Bridge Name or Ref.				
Bearing Identification Mark				
Number of bearings required				
Seating Material	Upper Surface			
	Lower Surface			
Allowable contact pressure (KSI)	Average			
	Edge Load			
Design load effects (KIP)		Vertical	max.	
			perm.	
			min.	
		Transverse		
		Longitudinal		
Translation	Irreversible	Transverse		
		Longitudinal		
	Reversible	Transverse		
		Longitudinal		
Rotation (RAD)	Irreversible	Transverse		
		Longitudinal		
	Reversible	Transverse		
		Longitudinal		
Maximum Bearing dimensions (IN)	Upper surface	Transverse		
		Longitudinal		
	Lower surface	Transverse		
		Longitudinal		
	Overall height			
Tolerable movement of bearing under transient loads (IN)		Vertical		
		Transverse		
		Longitudinal		
Allowable resistance to translation under service load (KIP)		Transverse		
		Longitudinal		
Allowable reistance to rotation under service load (IN-KIP)		Transverse		
		Longitudinal		
Type of attachment to structure and substructure		Transverse		
		Longitudinal		

FIGURE 14.4

Table 14.5.2-1 Bearing Suitability

Type of Bearing	Movement		Rotation about bridge axis inidicated			Resistance to Loads		
	Long	Trans	Trans	Long	Vert	Vert	Long	Trans
Plain Elastomeric Pad	S	S	S	S	L	L	L	L
Fiberglass Reinforced Pad	S	S	S	S	L	L	L	L
Cotton Duck Reinforced Pad	U	U	U	U	U	S	L	L
Steel-reinforced Elastomeric Bearing	S	S	S	S	L	S	L	L
Curved Sliding Spherical Bearing	R	R	S	S	S	S	R	R
PTFE/Elastomeric Bearing	S	S	S	S	S	S	L	L

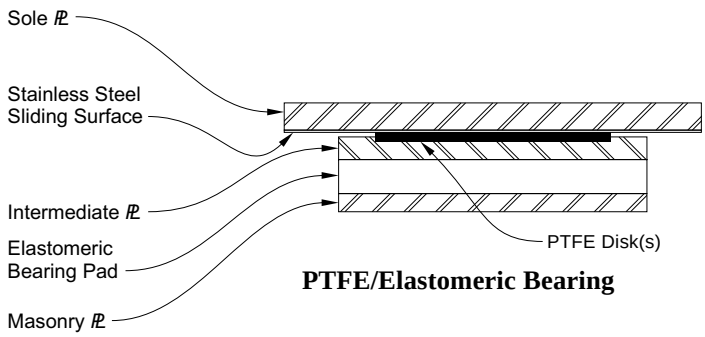

PTFE/Elastomeric Bearing

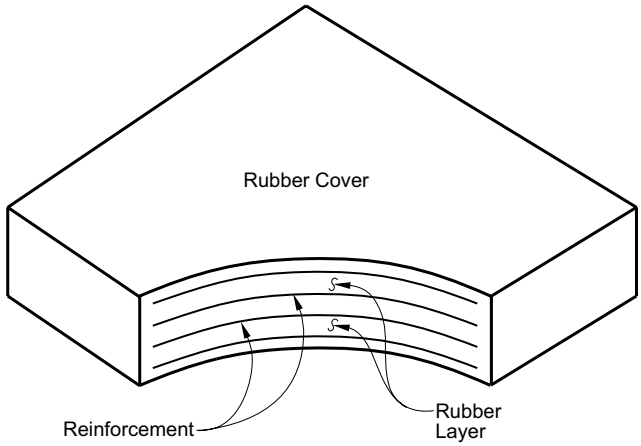

Elastomeric Bearing

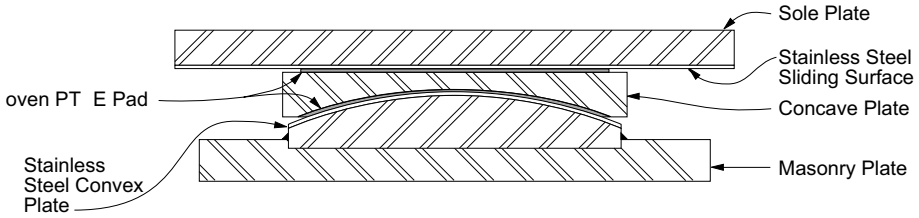

PTFE/Spherical Expansion Bearing (Non-Guided)

FIGURE 14.5.2-1 Typical Bearing Components

R = May be suitable but requires special considerations or additional elements such as sliders or guideways.
Long. = Longitudinal axis
Trans. = Transverse axis
Vert. = Vertical axis

14.5.3 Forces in the Structure Caused by Restraint of Movement at the Bearing

Horizontal forces and moments induced in the bridge by restraint of movement at the bearing shall be taken into account in the design of the bridge and the bearings. They shall be determined using the calculated movements and the bearing characteristics given in Article 14.6.

14.5.3.1 Horizontal Force

Horizontal forces may be induced by sliding friction, rolling friction or deformation of a flexible element in the bearing. The force used for design shall be the largest one applicable.

Sliding friction force shall be computed

$$H_m = \mu P_m \qquad (14.5.3.1\text{-}1)$$

where:

H_m = maximum horizontal load (kip)
μ = coefficient of friction
P_m = maximum compressive load (kip)

The force required to deform an elastomeric element shall be computed as:

$$H_m = GA\Delta_s / h_{rt} \qquad (14.5.3.1\text{-}2)$$

where:

G = Shear modulus of the elastomer (ksi)
A = plan area of elastomeric element or bearing (in^2)
Δ_s = maximum shear deformation of the elastomer (in)
h_{rt} = total elastomer thickness (in)

Rolling forces shall be determined by test.

14.5.3.2 Bending Moment

The bridge substructure and superstructure shall be designed for the largest moment, M_m which can be transferred by the bearing.

For curved sliding bearings without a companion flat sliding surface, M_m shall be estimated by:

$$M_m = \mu P_m R \qquad (14.5.3.2\text{-}1A)$$

and for curved sliding bearings with a companion flat sliding surface, M_m shall be estimated by:

$$M_m = 2\mu P_m R \qquad (14.5.3.2\text{-}1B)$$

where:

M_m = maximum bending moment (K-in)
R = radius of curved sliding surface (in)

For unconfined elastomeric bearings and pads, M_m shall be estimated by:

$$M_m = (0.5 E_c I)\theta_m / h_{rt} \qquad (14.5.3.2\text{-}2)$$

where:

I = moment of inertia of plan shape of bearing (in^4)
E_c = effective modulus of elastomeric bearing in compression (ksi)
θ_m = maximum design rotation (rad)

14.6 SPECIAL DESIGN PROVISIONS FOR BEARINGS

The stress increases permitted for certain load combinations by Table 3.22.1A of this specification shall not apply in the design of bearings.

14.6.1 *Deleted* +

14.6.1.1 *Deleted* +

14.6.1.2 *Deleted* +

14.6.1.3 *Deleted* +

14.6.1.4 *Deleted* +

14.6.2 PTFE Sliding Surfaces

PTFE, polytetrafluorethylene, may be used in sliding surfaces of bridge bearings to accommodate translation or rotation. All PTFE surfaces other than guides shall satisfy the requirements of this section. Curved PTFE surfaces shall also satisfy Article 14.6.3.

14.6.2.1 PTFE Surface

The PTFE surface shall be made from pure virgin PTFE resin satisfying the requirements of ASTM D 4894 or D 4895. It shall be fabricated as unfilled sheet, filled sheet of fabric woven from PTFE and other fibers.

Unfilled sheets shall be made from PTFE resin alone. Filled sheets shall be made from PTFE resin uniformly blended with glass fibers or other chemically inert filler. The maximum filler content shall be 15%.

Sheet PTFE may contain dimples to act as reservoirs for lubricant. Their diameter shall not exceed 0.32-in at the surface of the PTFE and their depth shall be not less than .08-in. and not more than half the thickness of the PTFE. The reservoirs shall be uniformly distributed over the surface area and shall cover more than 20% but less than 30% of it. Lubricant shall be silicone grease which satisfies military specification MIL-S-8660.

Woven fiber PTFE shall be made from pure PTFE fibers. Reinforced woven fiber PTFE shall be made by interweaving high strength fibers, such as glass, with the PTFE in such a way that the reinforcing fibers do not appear on the sliding face of the finished fabric.

14.6.2.2 Mating Surface

The PTFE shall be used in conjunction with a mating surface. Flat and curved mating surfaces shall be stainless steel. Flat surfaces shall be a minimum #8 mirror finish Type 304 stainless steel and shall conform to ASTM A167/A264. Curved stainless steel surfaces shall not exceed 16 micro in RMS and shall conform to ASTM designation A 167/A264, Type 304. The mating surface shall be large enough to cover the PTFE at all times.

14.6.2.3 Minimum Thickness Requirements

14.6.2.3.1 PTFE

For all applications, the thickness of the PTFE shall be at least $^1/_{16}$–in. after compression. Recessed sheet PTFE shall be at least ¼-in. thick. Woven fabric PTFE which is mechanically interlocked over a metallic substrate shall have a minimum thickness $^1/_{16}$-in. and a maximum thickness of $^1/_8$-in. over the highest point of the substrate.

14.6.2.3.2 Stainless Steel Mating Surfaces

The thickness of the stainless steel mating surface shall be at least $^1/_8$-in.

Backing plate requirements are specified in Article 14.6.2.6.2.

14.6.2.4 Contact Pressure

The maximum contact stress, σ_m, between the PTFE and the mating surface shall be determined with the maximum compressive load, P_m, using the nominal area.

The average contact stress shall be computed by dividing the load by the projection of the contact area onto a plane perpendicular to the direction of the load. The contact stress at the edge shall be computed by taking into account the maximum moment, M_m, transferred by the bearing assuming a linear distribution of stress across the PTFE.

Stresses shall not exceed those given in Table 14.6.2.4-1. Permissible stresses for intermediate filler contents shall be obtained by linear interpolation within Table 14.6.2.4-1.

14.6.2.5 Coefficient of Friction

The design coefficient of friction of the PTFE sliding surface shall be determined from Table 14.6.2.5-1. Intermediate values may be determined by interpolation. The coefficient of friction shall be determined by using the stress level associated with the maximum compressive load, P_m. Lesser values of the coefficient of friction may be used if verified by tests.

Table 14.6.2.4-1 Limits on Contact Stress for PTFE

Material	Ave. Contact Stress (KSI) Dead Load	Ave. Contact Stress (KSI) All Loads	Edge Contact Stress (KSI) Dead Load	Edge Contact Stress (KSI) All Loads
Unconfined PTFE:				
Unfilled sheets	1.5	2.5	2.0	3.0
Filled sheets - These figures are for maximum filler content	3.0	4.5	3.5	5.5
Confined sheet PTFE	3.0	4.5	3.5	5.5
Woven PTFE over a metallic substrate	3.0	4.5	3.5	5.5
Reinforced woven PTFE over a metallic substate	4.0	5.5	4.5	7.0

Table 14.6.2.5-1 Design Coefficients of Friction

Type of PTFE	Pressure (psi)	Coefficient of Friction 500	1000	2000	>3000
	Temperature (°F)				
Dimpled Lubricated	68	0.04	0.03	0.025	0.02
	-13	0.06	0.045	0.04	0.03
	-49	0.10	0.075	0.06	0.05
Unfilled	68	0.08	0.07	0.05	0.03
	-13	0.20	0.18	0.13	0.10
	-49	0.20	0.18	0.13	0.10
Filled	68	0.24	0.17	0.09	0.06
	-13	0.44	0.32	0.25	0.20
	-49	0.65	0.55	0.45	0.35
Woven	68	0.08	0.07	0.06	0.045
	-13	0.20	0.18	0.13	0.10
	-49	0.20	0.18	0.13	0.10

Where friction is required to resist applied loads, the design coefficient of friction under dynamic loading may be taken as not more than 10% of the value listed in Table 14.6.2.5-1 for the bearing stress and PTFE type.

The coefficients of friction in Table 14.6.2.5-1 are based on a #8 mirror finish mating surface. Coefficients of friction for rougher surface finishes must be established by test results in accordance with Division II, Section 18 of the AASHTO Standard Specifications for Highway Bridges, Sixteenth Edition.

14.6.2.6 Attachment

14.6.2.6.1 PTFE

Sheet PTFE confined in a recess in a rigid metal backing plate for one half its thickness shall be bonded.

Sheet PTFE which is not confined shall be bonded by an approved method to a metal surface or an elastomeric layer with a Shore A durometer hardness of at least 90. Woven PTFE on a metallic substrate shall be attached to the metallic substrate by mechanical interlocking which can resist a shear force no less than 0.10 times the applied compressive force.

14.6.2.6.2 Mating Surface

The mating surface for flat sliding shall be attached to a backing plate by welding in such a way that it remains flat and in full contact with its backing plate throughout its service life. The weld shall be detailed to form an effective moisture seal around the entire perimeter of the mating surface so that interface corrosion cannot occur. The attachment shall be capable of resisting the maximum friction force which can be developed by the bear-

ing under service loads. The welds used for the attachment shall be clear of the contact and sliding area of the PTFE surface.

14.6.3 Bearings with Curved Sliding Surfaces

Bearings with curved sliding surfaces shall consist of two metal parts with matching curved surfaces and a low friction sliding interface. The curved surfaces shall be spherical. The material properties, characteristics, and frictional properties of the sliding interface shall satisfy the requirements of either Article 14.6.2 or Article 14.6.7.

14.6.3.1 Geometric Requirements

The radius of the curved surface shall be large enough to assure that the maximum average bearing stress, σ_m, on the horizontal projected area of the bearing at the maximum load, P_m, shall satisfy the average stress requirements of Article 14.6.2.4. The maximum average bearing stress shall be taken as

- For spherical Bearings

$$\sigma_m = \frac{4P_m}{\pi D^2} \qquad (14.6.3.1\text{-}2)$$

where

D = diameter of the projection of the loaded surface of the bearing in the horizontal plane (in)

The two surfaces of a sliding interface shall have equal radii.

14.6.3.2 Resistance to Lateral Load

In bearings which are required to resist horizontal loads, either an external restraint system shall be provided, or for a spherical surface the horizontal load shall be limited to:

$$H_m \le \pi R^2 \sigma_{PTFE} \sin^2(\Psi - \beta - \theta_m)\sin\beta \qquad (14.6.3.2\text{-}2)$$

where

$$\beta = \tan^{-1}\left(\frac{H_m}{P_D}\right) \qquad (14.6.3.2\text{-}3)$$

and

$$\Psi = \sin^{-1}\left(\frac{L}{2R}\right) \qquad (14.6.3.2\text{-}4)$$

and:

H_m = maximum horizontal load.
L = projected length of the sliding surface perpendicular to the rotation axis.
P_D = compressive load due to permanent loads.

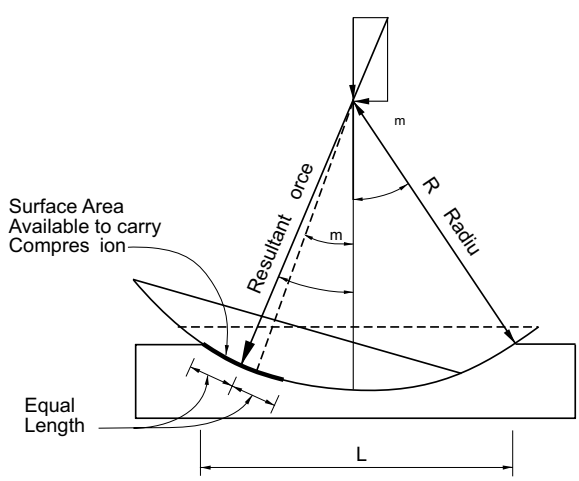

FIGURE 14.6.3.2-1

R = radius of the curved sliding surface.
β = angle between the vertical and applied loads.
θ_m = maximum design rotation angle. See Article 14.4.1.
σ_{PTFE} = maximum average contact stress permitted on the PTFE by Table 14.6.2.4-1.
Ψ = subtended semi-angle of the curved surface.

14.6.4 *Deleted*

14.6.4.1 *Deleted*

14.6.4.2 *Deleted*

14.6.4.3 *Deleted*

14.6.4.4 *Deleted*

14.6.4.5 *Deleted*

14.6.4.6 *Deleted*

14.6.4.7 *Deleted*

14.6.4.8 *Deleted*

14.6.5 Steel Reinforced Elastomeric Bearings - Method B

14.6.5.1 General

Steel reinforced elastomeric bearings shall consist of alternate layers of steel reinforcement and elastomer, bonded together. Tapered elastomer layers shall not be used. All internal layers of elastomer shall be of the same thickness. The top and bottom cover layers shall be no thicker than 70% of the internal layers. In addition to any internal reinforcement, bearings may have external steel load plates bonded to the upper or lower elastomer layers or both.

14.6.5.2 Material Properties

The elastomer shall have a shear modulus between 0.095 and 0.120 ksi and a nominal hardness between 50 and 60 on the Shore A scale at 70ºF.

The shear modulus of the elastomer at 70°F and 0°F shall be used as the basis for design, unless site temperatures warrant lower temperatures. The creep deflection relative to the instantaneous deflection shall be obtained from Table 14.6.5.2-1. All bearings shall be manufactured from elastomer grade No.3.

Table 14.6.5.2-1 Elastomer properties at different hardnesses.

Hardness (Shore 'A')	50	60	70
$\frac{\text{Creep deflection at 25 yrs}}{\text{Instantaneous deflection}}$	25%	35%	45%

14.6.5.3 Design Requirements

14.6.5.3.1 Scope

Bearings designed by the provisions of this section shall be subsequently tested in accordance with the requirements for steel reinforced elastomeric bearings of Article 18.7 of Division II of the AASHTO Standard Specifications for Highway Bridges, Sixteenth Edition. Steel reinforced elastomeric bearings should only be designed by these provisions when the provisions of Article 14.6.6 are exceeded.

14.6.5.3.2 Compressive Stress

In any bearing layer, the average compressive stress (ksi) shall satisfy the following:

- for bearings subject to shear deformation

$$\begin{aligned} \sigma_{TL} &\le 1.6\,\text{KSI} \\ \sigma_{TL} &\le 1.66\,\text{GS} \\ \sigma_{L} &\le 0.66\,\text{GS} \end{aligned} \qquad (14.6.5.3.2\text{-}1)$$

- for bearings fixed against shear deformation

$$\begin{aligned} \sigma_{TL} &\le 1.75\,\text{KSI} \\ \sigma_{TL} &\le 2.00\,\text{GS} \\ \sigma_{L} &\le 1.00\,\text{GS} \end{aligned} \qquad (14.6.5.3.2\text{-}2)$$

where
σ_L = average compressive stress due to the live load (KSI)
σ_{TL} = Average compressive stress due to total dead

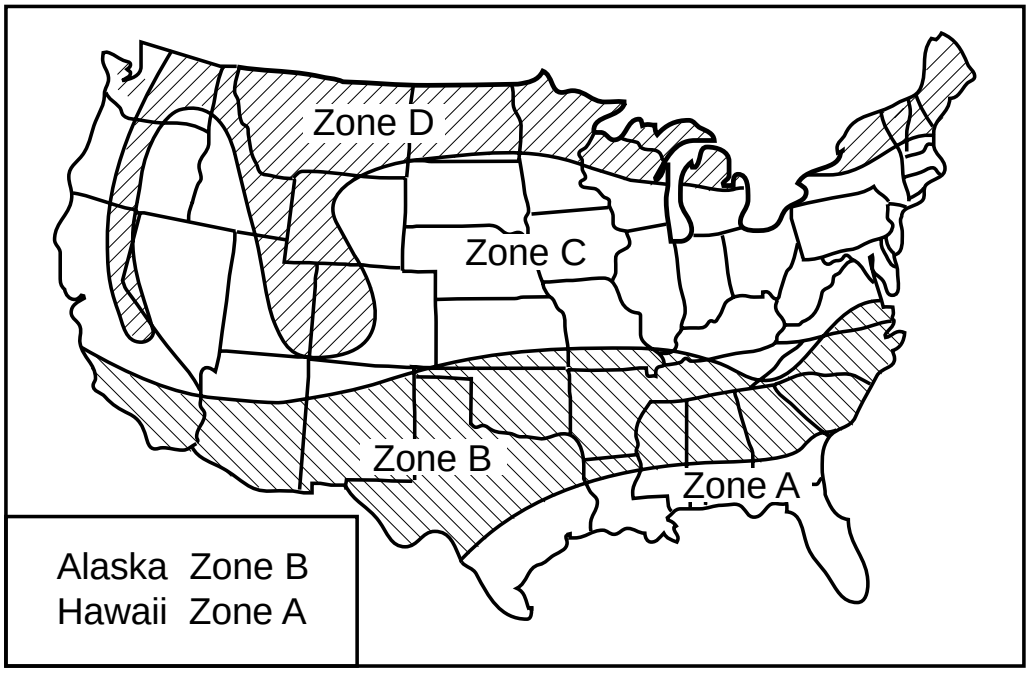

FIGURE 14.6.5.2-1 Map of Low Temperature Zones

plus live load (KSI)
G = shear modulus of elastomer (KSI)
S = shape factor of the thickest layer of the bearing

14.6.5.3.3 Compressive Deflection

Deflections due to total load and to live load alone shall be considered separately.

Instantaneous deflection shall be calculated as follows:

$$\delta = \Sigma \varepsilon_i h_{ri} \qquad (14.6.5.3.3\text{-}1)$$

where

ε_i = instantaneous compressive strain in the ith elastomer layer of a laminated elastomeric bearing
h_{ri} = thickness of ith elastomeric layer in elastomeric bearing (in)

Values for ε_i shall be determined from test results or from stress vs. strain curves found in the Bridge Memos
+ to Designers. The effects of creep of the elastomer shall
+ be added to the instantaneous deflection when considering long-term deflections. They should be computed from information relevant to the elastomeric compound used. In the absence of material-specific data, the values given in Article 14.6.5.2 shall be used.

14.6.5.3.4 Shear

The horizontal movement of the bridge superstructure, Δ_0, shall be taken as the maximum possible displacement caused by creep, shrinkage, post-tensioning, combined with thermal effects computed in accordance with this Specification. The maximum shear deformation of the bearing, Δ_s, shall be taken as Δ_0, modified to account for the pier flexibility and construction procedures. If a low friction sliding surface is installed, Δ_s need not be taken larger than than the deformation corresponding to first slip.

The bearing shall be designed so that

$$h_{rt} \geq 2\Delta_s \qquad (14.6.5.3.4\text{-}1)$$

where

h_{rt} = total elastomeric thickness (in)
Δ_s = maximum service shear deformation of the elastomer (in)

14.6.5.3.5 Combined Compression and

Rotation

Rotations shall be taken as the maximum possible difference in slope between the top and bottom surfaces of the bearing. They shall include the effects of initial lack-of-parallelism and subsequent girder end rotation due to imposed loads and movements. Bearings shall be designed so that uplift does not occur under any combination of loads and corresponding rotation.

All rectangular bearings shall satisfy

$$\sigma_{TL} \geq 1.0\,GS\left(\frac{\theta_m}{n}\right)\left(\frac{B}{h_{ri}}\right)^2 \qquad (14.6.5.3.5\text{-}1)$$

A rectangular bearing subject to shear deformation shall also satisfy Equation 14.6.5.3.5-2; those fixed against shear deformation shall also satisfy Equation 14.6.5.3.5-3.

$$\sigma_{TL} \leq 1.875GS\left(1-0.200\left(\frac{\theta_m}{n}\right)\left(\frac{B}{h_{ri}}\right)^2\right) \qquad (14.6.5.3.5\text{-}2)$$

$$\sigma_{TL} \leq 2.250GS\left(1-0.167\left(\frac{\theta_m}{n}\right)\left(\frac{B}{h_{ri}}\right)^2\right) \qquad (14.6.5.3.5\text{-}3)$$

where

- B = length of pad if rotation is about its transverse axis, or width of pad if rotation is about its longitudinal axis (in)
- G = shear modulus of elastomer (ksi)
- h_{rt} = thickness of the ith layer of elastomer (in)
- n = number of layers of elastomer
- S = shape factor of the thickest layer of the bearing
- θ_m = component of maximum service rotation in direction of interest (rad)
- σ_{TL} = average compressive stress due to the total dead plus live load (ksi)

All circular bearings shall satisfy

$$\sigma_{TL} > 0.75GS\left(\frac{\theta_m}{n}\right)\left(\frac{D}{h_{ri}}\right)^2 \qquad (14.6.5.3.5\text{-}4)$$

A circular bearing subject to shear deformation shall also satisfy Equation 14.6.5.3.5-5; those fixed against shear deformation shall also satisfy Equation 14.6.5.3.5-6.

$$\sigma_{TL} < 2.5GS\left(1-0.15\left(\frac{\theta_m}{n}\right)\left(\frac{D}{h_{ri}}\right)^2\right) \qquad (14.6.5.3.5\text{-}5)$$

$$\sigma_{TL} < 3.0GS\left(1-0.125\left(\frac{\theta_m}{n}\right)\left(\frac{D}{h_{ri}}\right)^2\right) \qquad (14.6.5.3.5\text{-}6)$$

where

D = diameter of pad (in)

14.6.5.3.6 Stability

Bearings shall be proportioned to avoid instability. If

$$\frac{3.84(h_{rt}/L)}{S\sqrt{1+2L/W}} \leq \frac{2.67}{S(S+2)(1+L/4W)} \qquad (14.6.5.3.6\text{-}1)$$

the bearing is stable for all allowable loads in this specification and no further consideration of stability is required.

For rectangular bearings not satisfying equation 14.6.5.3.6-1, the average compressive stress due to dead and live load shall satisfy:

- If the bridge deck is free to translate horizontally

$$\sigma_{TL} \leq \frac{G}{\left(\frac{3.84(h_{rt}/L)}{S\sqrt{1+2L/W}} - \frac{2.67}{S(S+2)(1+L/4W)}\right)} \qquad (14.6.5.3.6\text{-}2)$$

- If the bridge deck is not free to translate horizontally

$$\sigma_{TL} \leq \frac{G}{\left(\frac{1.92(h_{rt}/L)}{S\sqrt{1+2L/W}} - \frac{2.67}{S(S+2)(1+L/4W)}\right)} \qquad (14.6.5.3.6\text{-}3)$$

If L is greater than W for a rectangular bearing, stability shall be checked by the above formulas with L and W interchanged.

For circular bearings, stability may be evaluated by

using the equations for a square bearing with W = L = 0.8 D.

14.6.5.3.7 Reinforcement

The thickness of the reinforcement, h_s, shall satisfy the requirements

$$h_s > \frac{3.0 h_{r\,max} \sigma_{TL}}{F_y} \qquad (14.6.5.3.7\text{-}1)$$

and

$$h_s > \frac{2.0 h_{r\,max} \sigma_L}{F_{sr}} \qquad (14.6.5.3.7\text{-}2)$$

where

h_s = thickness of steel laminate (in)
F_{sr} = allowable fatigue stress range for over 2,000,000 cycles (ksi)

If holes exist in the reinforcement, the minimum thickness shall be increased by a factor of 2 (gross width)/(net width).

14.6.6 Elastomeric Pads and Steel Reinforced Elastomeric Bearings – Method A

14.6.6.1 General

This section of the specification covers the design of plain elastomeric pads, PEP, pads reinforced with discrete layers of fiberglass, FGP, and pads reinforced with closely spaced layers of cotton duck, CDP and steel reinforced elastomeric bearings. Layer thicknesses in FGP may be different from one another. For steel reinforced elastomeric bearings designed in accordance with the provisions of this section, internal layers shall be of the same thickness and cover layers shall be no more than 70% of thickness of internal layers.

14.6.6.2 Material Properties

The materials for plain elastomeric pads, fiberglass + reinforced pads and steel reinforced elastomeric bearings + shall satisfy the requirements of Article 14.6.5.2. Bearing pads reinforced with closely spaced layers of cotton duck + shall have a shear modulus between 0.095 and 0.250 ksi + and a nominal hardness between 50 and 70 on the shore + "A" scale. +

14.6.6.3 Design Requirements

14.6.6.3.1 Scope

Plain elastomeric pads, fiberglass reinforced pads and cotton duck reinforced pads shall be designed in accordance with the provisions of this Article. Steel reinforced elastomeric bearings designed in accordance with the provisions of this article shall qualify for the test requirements appropriate for elastomeric pads.

The provisions for FGP apply only to pads where the fiberglass is placed in double layers $^1/_8$-in. apart.

The physical properties of neoprene used in these bearings shall conform to the following ASTM requirements, with modifications as noted: +

Neoprene: D4014

Modifications:

(1) The Shore A Durometer hardness shall lie within the limits specified in Article 14.6.6.2.
(2) Samples for compression set tests shall be prepared using a Type 2 die.

14.6.6.3.2 Compressive Stress

The average compressive stress, σ_{TL}, in any layer shall satisfy

- for PEP, $\sigma_{TL} \leq$ 0.80 ksi, and σ_{TL} 0.55GS
- for FGP σ_{TL} 0.80 ksi, and σ_{TL} 1.00GS
- for CDP, σ_{TL} 1.50 ksi

In FGP, the values of S used shall be that for the greatest distance between the mid-point of double reinforcement layers at the top and bottom of the elastomer layer.

For steel reinforced elastomeric bearings designed in accordance with the provisions of this article σ_{TL} 1.00 ksi, and σ_{TL} 1.0 GS where the value of S used shall be that for the thickest layer of the bearing. The stress limits may be increased by 10 percent where shear deformation

is prevented.

14.6.6.3.3 Compressive Deflection

The provisions of Article 14.6.5.3.3 shall apply.

14.6.6.3.4 Shear

The horizontal bridge movement shall be computed in accordance with Article 14.4. The maximum shear deformation of the pad, Δ_s, shall be taken as the horizontal bridge movement, reduced to account for the pier flexibility and modified for construction procedures. If a low friction sliding surface is used, Δ_s need not be taken larger than the deformation corresponding to first slip.

The pad shall be designed as follows:

h_{rt} $2\Delta_s$ for PEP, FGP and steel reinforced elastomeric bearings

h_{rt} $10\,\Delta_s$ for CDP (14.6.6.3.4-1)

14.6.6.3.5 Rotation

The rotation about each axis shall be taken as the maximum possible rotation between the top and bottom of the pad caused by initial lack of parallelism and girder end rotation. The shape factor of CDP shall be defined as 100 for use in equations 14.6.6.6.3.5-1 and 14.6.6.3.5-2. They shall satisfy:

- for rectangular pads

or

$$\sigma_{TL} \geq 0.5GS\left(\frac{W}{h_{rt}}\right)^2 \theta_{m,z} \qquad (14.6.6.3.5\text{-}1)$$

- for circular pads

$$\sigma_{TL} \geq 0.375GS\left(\frac{D}{h_{rt}}\right)^2 \theta_m \qquad (14.6.6.3.5\text{-}2)$$

14.6.6.3.6 Stability

To ensure stability, the total thickness of pad shall not exceed the least of L/3, W/3, or D/4.

14.6.6.3.7 Reinforcement

The reinforcement in FGP shall be fiberglass with a failure strength in each direction of at least 2.2 h_{ri} K/in of width. For the purpose of this article, if the layers of elastomer are of different thickness, h_{ri} shall be taken as the mean thickness of the two layers of the elastomer bonded to the reinforcement. If the fiberglass reinforcement contains holes, its strength shall be increased over the minimum value specified above by two times the gross width divided by net width.

Reinforcement for steel reinforced elastomeric bearings designed in accordance with the provisions of this article shall conform to the requirements of Article 14.6.5.3.7.

14.6.6.4 Resistance to Deformation

The shear force on the structure induced by deformation of the elastomer shall be based on a G value not less than that of the elastomer at 0ºF. Effects of relaxation shall be ignored.

If the design shear force, H_m, due to pad deformation exceeds one-fifth of the minimum vertical force, the pad shall be secured against horizontal movement. +

The pad shall not be permitted to sustain uplift forces.

14.6.7 *Deleted*

14.6.7.1 *Deleted* +

14.6.7.2 *Deleted* +

14.6.7.3 *Deleted* +

14.6.7.4 *Deleted* +

14.6.8 *Deleted* +

14.6.8.1 *Deleted* +

14.6.8.2 *Deleted* +

14.6.8.3 *Deleted* +

+ **14.6.8.4** *Deleted*

+ **14.6.8.5** *Deleted*

+ **14.6.8.6** *Deleted*

+

14.6.9 Guides and Restraints

14.6.9.1 General

Guides may be used to prevent movement in one direction. Restraints may be used to permit only limited movement in one or more directions. Guides and restraints shall have a low-friction material at their sliding contact surfaces.

14.6.9.2 Design Loads

The guide or restraint shall be designed using the maximum load combinations for the larger of

- the horizontal design load, or
- 10% of the maximum vertical load acting on all the bearings at the bent divided by the number of guided bearings at the bent.

14.6.9.3 Materials

For steel bearings, the guide or restraint shall be made from steel conforming to AASHTO M 270 (ASTM A 709) Grades 36, 50 or 50W, or stainless steel conforming to ASTM A 240.

The low-friction interface material shall be approved by the Engineer.

14.6.9.4 Geometric Requirements

Guides shall be parallel, long enough to accommodate the full design displacement of the bearing in the sliding direction, and shall permit a minimum of $^1/_{32}$-in. and a maximum of $^1/_{16}$-in. free slip in the restrained direction. Guides shall be designed to avoid binding under all design loads and displacements, including rotations.

14.6.9.5 Design Basis

14.6.9.5.1 Load Location

The horizontal load acting on the guide or restraint shall be assumed to act at the centroid of the low-friction interface material. Design of the connection between the guide or restraint and the body of the bearing system shall take into account both shear and overturning moment.

14.6.9.5.2 Contact stress

The contact stress on the low-friction material shall not exceed that recommended by the manufacturer. For PTFE, the stresses due to the maximum loads, P_m and H_m, shall not exceed those given in Table 14.6.2.4.1 under sustained loading or 1.25 times those stresses for short-term loading.

14.6.9.6 Attachment of Low-Friction Material

The low-friction material shall be attached by at least two of the following three methods:

- mechanical fastening
- bonding
- mechanical interlocking with a metal substrate.

14.6.10 Other Bearing System

Bearing systems made from components not described in Articles 14.6.1 through 14.6.8 may be used, subject to the approval of the Engineer and Bearing Technical Specialist. Such bearings shall be adequate to resist the + forces and deformations imposed on them without material distress and without inducing deformations large + enough to threaten their proper functioning. +

The dimensions of the bearing shall be chosen to provide for adequate movements at all times. The materials used shall have sufficient strength, stiffness, and resistance to creep and decay to ensure the proper functioning of the bearing throughout the design life of the bridge.

The Engineer shall determine the tests which the bearing must satisfy. The tests shall be designed to demonstrate any potential weakness in the system under individual compression, shear or rotational loading or

combinations thereof. Testing under sustained or cyclic loading shall be required.

14.7 LOAD PLATES AND ANCHORAGE FOR BEARINGS

14.7.1 Plates for Load Distribution

The bearing, together with any additional plates, shall be designed so that

- the combined system is stiff enough to prevent distortions of the bearing which would impair its proper functioning;
- the stresses imposed on the supporting structure satisfy the limits specified by the Engineer. Allowable stresses on concrete and grout beds shall be assumed to be based on the maximum compressive load, P_m, on the bearing;
- the bearing can be replaced within the jacking height limits specified by the Engineer without damage to the bearing, distribution plates or supporting structure. If no limit is given, a height of $^3/_8$ in. shall be used.

Computations of the strength of steel components and beam stiffener requirements of steel girders shall be made in conformance with Section 10 of Division I of these specifications.

In lieu of a more precise analysis, the load from a bearing fully supported by a grout bed may be assumed to spread out at a slope of 1.5:1, horizontal to vertical, from the edge of the smallest element of the bearing which carries the compressive load.

14.7.2 Tapered Plates

If, under full dead load at the mean annual temperature for the bridge site, the inclination of the underside of the girder to the horizontal exceeds 0.01 rad, a tapered plate shall be used in order to provide a level load surface to be placed on the bearing.

14.7.3 Anchorage

All load distribution plates and all bearings with external steel plates shall be positively secured to their supports by bolting or welding.

All girders shall be positively located on their supporting bearings by a connection which can resist the horizontal forces which may be imposed on it. Separation of bearing components shall not be permitted. A connection, adequate to resist the least favorable combination of loads, shall be installed wherever necessary to prevent separation.

14.8 CORROSION PROTECTION

All exposed steel parts of bearings not made from stainless steel shall be protected against corrosion by zinc metallization, hot-dip galvanizing or a paint system approved by the Engineer. A combination of zinc metallization or hot-dip galvanizing and a paint system may be used.