Girder Layout Sheet Checklist

A. Plan

1. Orient on sheet the same as the General Plan.
2. Show North arrow if several Girder Layouts are used, as in a long curved structure.
3. Scale 1/8" = 1'-0" usual maximum; 1" = 20' may be used for line diagram type Girder Layouts. On widenings it may be necessary to use larger (1/4" = 1'-0") scale to show detail.
4. Place intermediate diaphragms parallel to transverse deck reinforcement.
5. Vertical fillets are not required for skews under 20°.
6. Combine the Girder Layout and Typical Section sheets when possible.
7. Dimension length of supports from station line to centerline of exterior girders, but do not show intermediate girder spacing unless it differs from the Typical Section.
8. Do not show stations and layout given on General Plan and Foundation Plan.
9. On girder layouts for steel girders detail the length and bearing of girders.
10. Length of girders are tabulated on precast girder standard sheets, but note the bearing of the girders on the girder layout.
11. Check list:
    - Utility Opening locations and call out type
    - Girder Flare lengths
    - Girder Stem Thickness
    - Transverse deck reinforcement layout
    - Detail deck corners on skewed hinges

B. Longitudinal Section

1. Show stirrup spacing.
2. Show bottom slab tapers on the cap section on the Bent sheets and longitudinal sections.
3. Show cable path to scale for prestressed bridges.
4. Note control dimensions at centerline of supports and locate inflection points of cable path.
5. See page 9-21 for example.

C. Camber Diagram

1. Draw diagram, but do not note scale.
2. Use one diagram or all girders except unusual conditions.
3. See pages 9-20 and 11-61 for examples.
4. Camber values are tabulated on precast girder standards.
5. Camber for steel girders should be detailed on girder detail sheets.
6. Camber Diagrams are available from BDS Plot Command.

D. C.G. of Prestressing Force

1. Draw a diagram to scale similar to line diagrams shown on 9-21.
2. Prestress C.G. Diagrams are available from BDS Plot Command and can be incorporated on the plan sheets.
3. Prestress Notes are also available from BDS Plot Command.

E. Examples of BDS Plots

1. Longitudinal Section and Prestress Path are shown on page 9-21.1.
2. Camber Diagram is shown on page 9-21.2.
3. Prestress Notes are shown on page 9-21.3.

Camber Diagrams for Cast-In-Place Concrete Girders

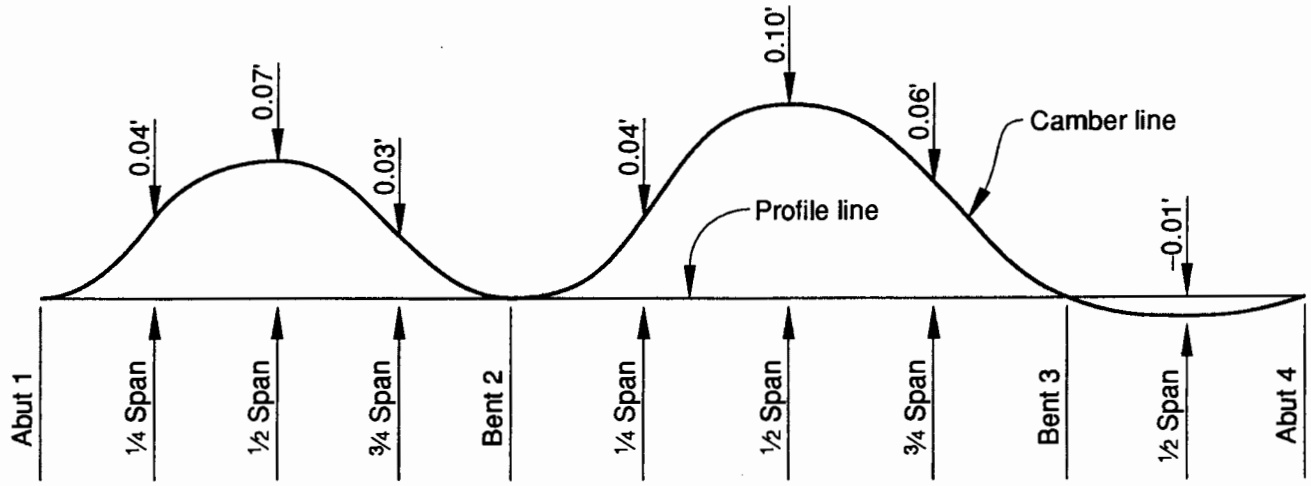

Camber Diagram
Does not include allowance for falsework settlement

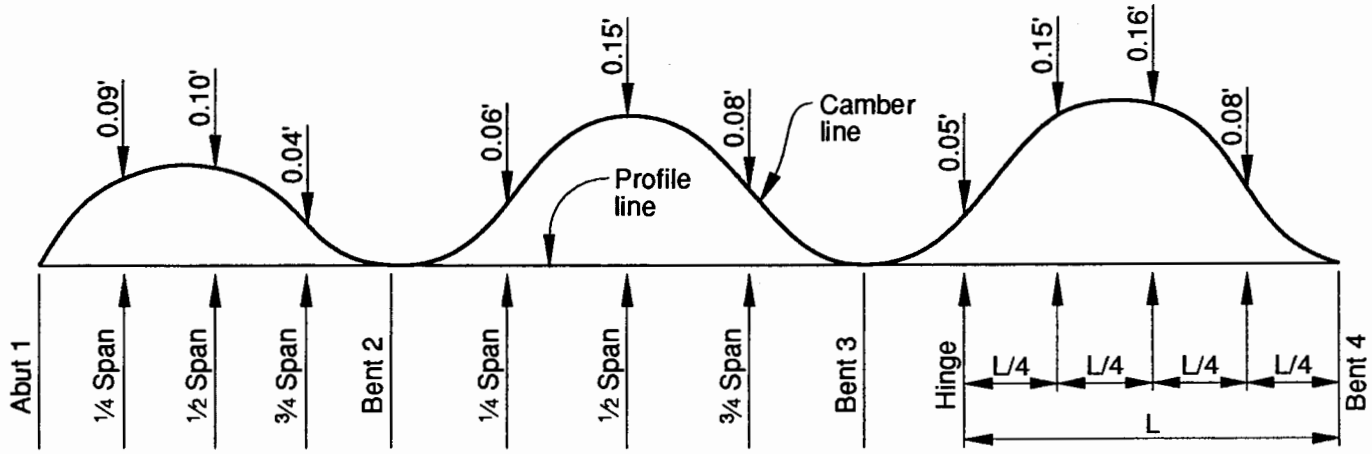

Camber Diagram – Spans 1, 2, and 3
Does not include allowance for falsework settlement

Center of Gravity of Prestressing Force Diagram

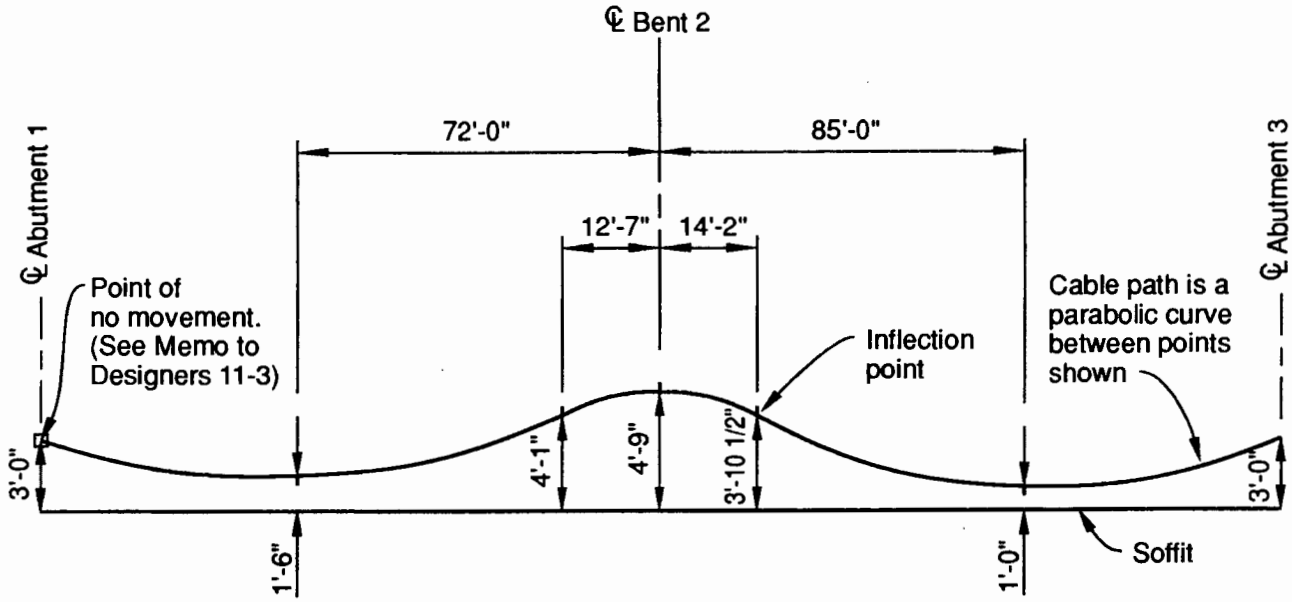

PATH OF CENTER OF GRAVITY OF PRESTRESSING FORCE

Note: On multiple span continuous prestress bridges, utilizing 2-end stressing, use a similar diagram. Dimension the location of the theoretical point of no movement and use the note: "Theoretical point of no movement for two end stressing."

On variable span bridges, the dimensions should be indicated as below; or, they may be tabulated.

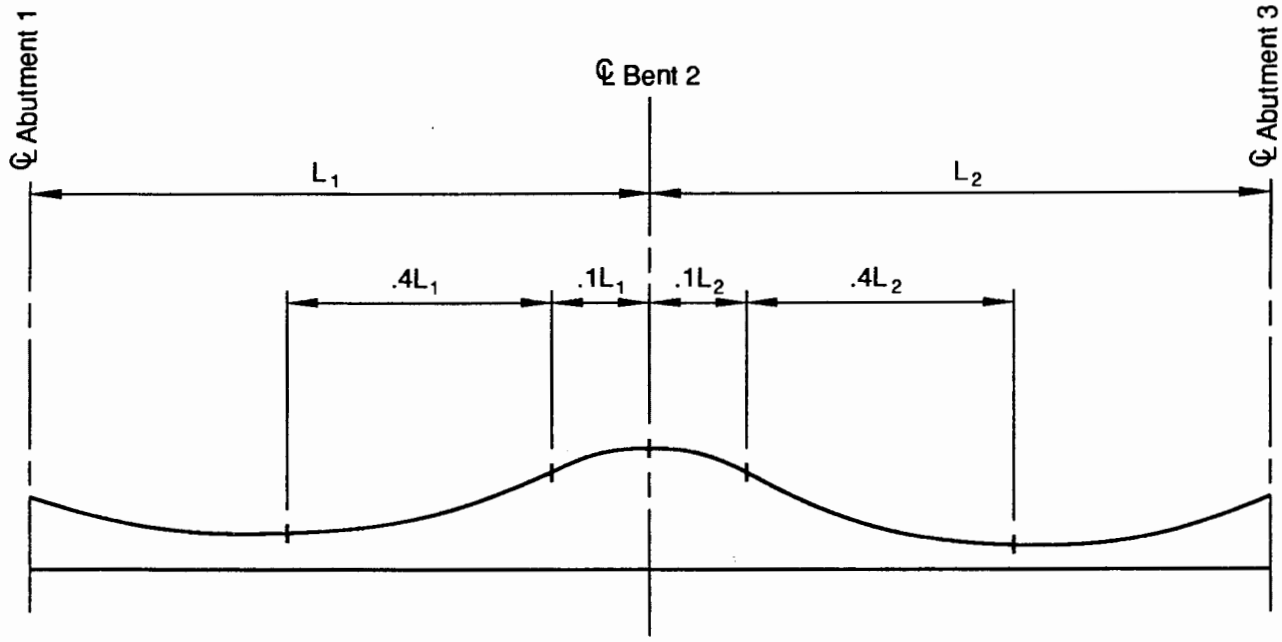

CABLE DATA

(DISTANCES ARE MEASURED IN FEET FROM THE LEFT END OF EACH MEMBER.)
(OFFSETS ARE SHOWN BELOW DISTANCES.)

SPAN 1= 162.00			SPAN 2= 150.00		
1	2	3	1	2	3
0.00	68.04	145.80	15.00	87.00	150.00
3.50	1.00	4.52	4.52	1.00	3.50

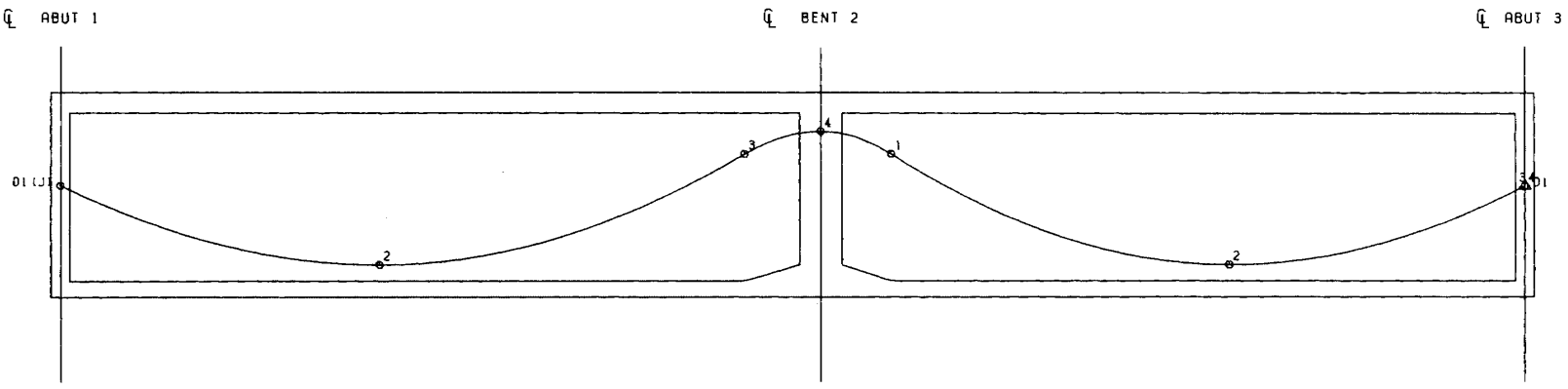

LONGITUDINAL SECTION

PATH 01																
	3.50	2.45	1.69	1.20	1.01	1.10	1.49	2.20	3.20	4.52	5.25	4.52	3.20	2.20	1.49	1.10	1.01	1.20	1.69	2.45	3.50

CABLE PATH OFFSETS

Example
Longitudinal Section produced by BDS Plot Command.

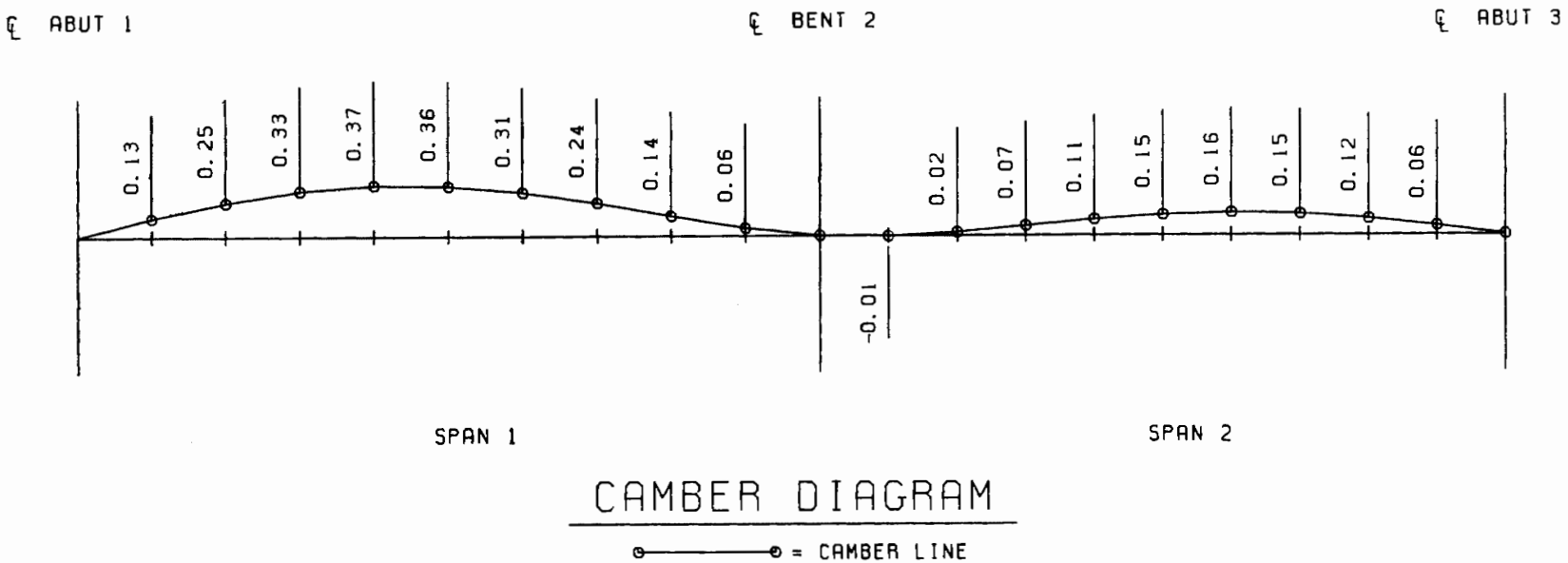

Example
Camber Diagram produced by BDS Plot Command.

PRESTRESSING NOTES

1. DESIGN BASED ON 270 KSI LOW RELAXATION STRAND.
2. TENDON LENGTH INCLUDES 4 FEET FOR JACKS.
3. DISTRIBUTION OF PRESTRESS FORCE (PJACK) BETWEEN GIRDERS SHALL NOT EXCEED THE RATIO OF 3:2.
   THE MAXIMUM FINAL FORCE VARIATION BETWEEN THE GIRDERS SHALL NOT EXCEED 725 KIPS.
   CONCRETE: F'_c = 4000 PSI AT 28 DAYS.
   F'_{ci} = 3500 PSI AT TIME OF STRESSING.
   TOTAL NUMBER OF GIRDERS = 4
4. MODULUS USED FOR P/S STEEL IS 28000 KSI.
5. (J) INDICATES AT WHICH END JACKING IS DONE.
6. FORCE COEFF. = INITIAL STRESS AT POINT OF NO MOVEMENT OF PATH.
7. △ INDICATES POINT OF NO MOVEMENT OF PATH.
8. CAMBER DIAGRAM E_c = 3600/4 KSI.
9. OFFSETS FOR CABLE PATH ARE MEASURED IN FEET FROM THE SOFFIT AT 1/10TH POINTS.
10. CENTER OF GRAVITY OF PATH MAY BE ADJUSTED ±6" AT ANCHORAGE.
11. CAMBER IS MEASURED IN FEET FROM THE PROFILE GRADE LINE AT 1/10TH POINTS.
12. ⊙ INDICATES HIGH, LOW, OR INFLECTION POINTS -- PATH PARABOLIC BETWEEN POINTS.
13. CONTRACTOR SHALL SUBMIT ELONGATION CALCULATIONS BASED ON INITIAL STRESS AT △= FORCE COEFF TIMES JACKING STRESS.
14.

PATH NO.	P-JACK (KIPS)	% JACK	LOSSES (KSI)	FORCE COEFF	AS (SQ IN)	F'_s (KSI)	TENDON LENGTH (FT)	ELONGATION (IN)	ANCHOR SET LT	ANCHOR SET RT	POINT OF NO MOVEMENT SPAN	POINT OF NO MOVEMENT DIST
01	6800	75	20	0.831	33.58	270	316.00	25.05	0.375	0.000	2	150.00

Example
Prestress Notes produced by BDS Plot Command.

CONCRETE STRENGTH AND TYPE LIMITS

The plans and/or specifications must clearly define the pay limits for all concrete. The specifications will provide that all concrete not otherwise designated on the plans will be paid for as Structural Concrete, Bridge. Likewise, the limits for all high strength concrete must be shown on the plans. Limits for both of the above can be shown either by the use of type and strength designation drawings similar to those shown on this page and on Page 9-23, or by providing this data directly on the detail drawings of the various elements.

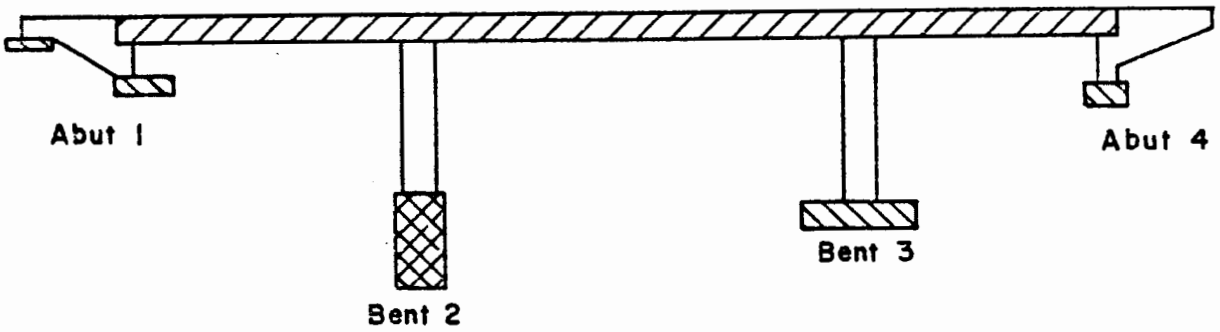

CONCRETE STRENGTH AND TYPE LIMITS

Structural Concrete, Bridge

Structural Concrete, Bridge (4000 psi at 28 days)
(or Structural Concrete, Lightweight)

Structural Concrete, Bridge Footing

Cast-in-Drilled-Hole Concrete Pile
(or Structural Concrete, Pier Column)

CONCRETE STRENGTH AND TYPE LIMITS (Cont.)

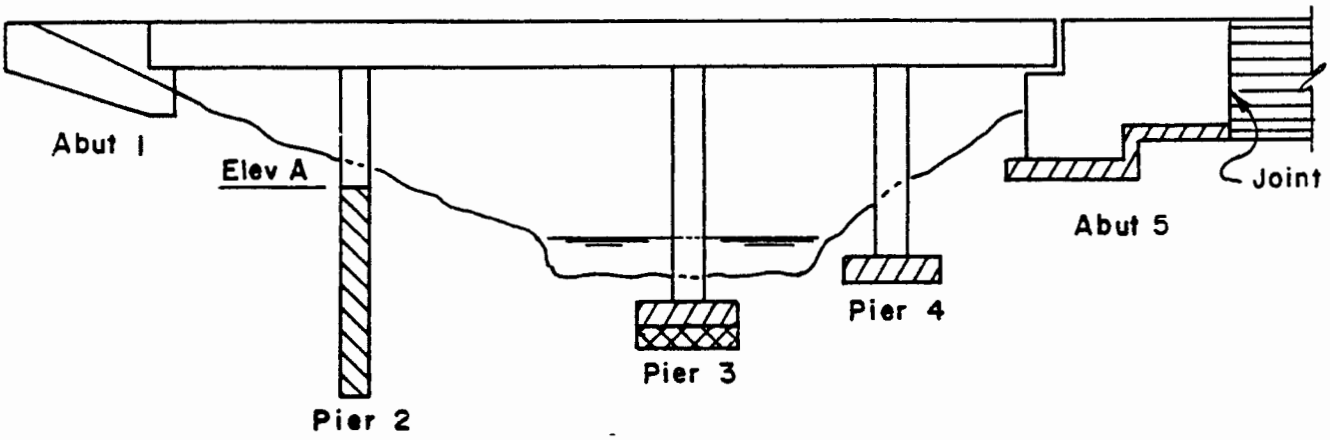

CONCRETE TYPE LIMITS

- Structural Concrete, Retaining Wall
- Structural Concrete, Bridge
- Structural Concrete, Bridge Footing
- Seal Course Concrete
- Structural Concrete, Pier Column (or Cast-In-Drilled-Hole Concrete Pile)

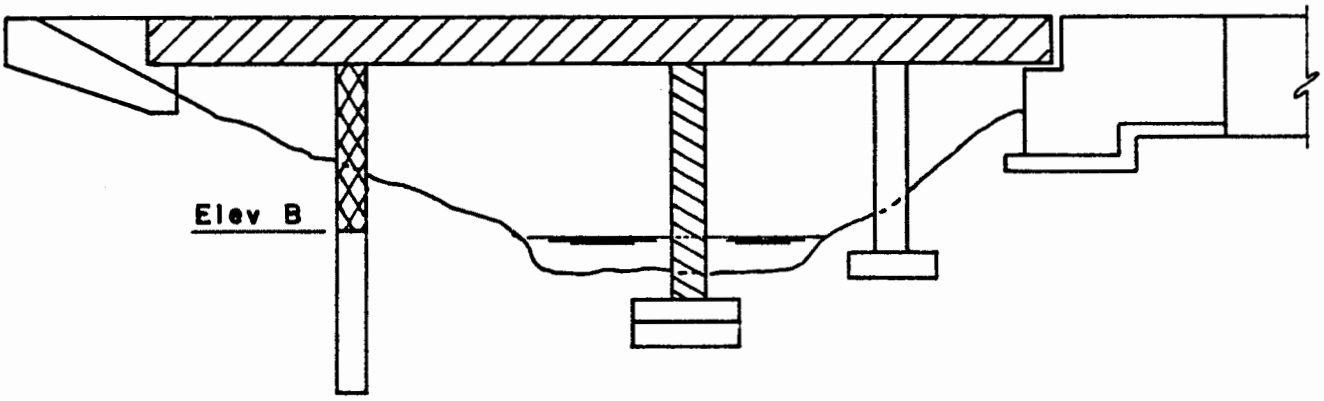

CONCRETE STRENGTH LIMITS

- 4000 psi at 28 days
- 5000 psi at 28 days
- 4500 psi at 28 days
- No Specified Strength

Deck Joints
Cast-in-Place Concrete Girder

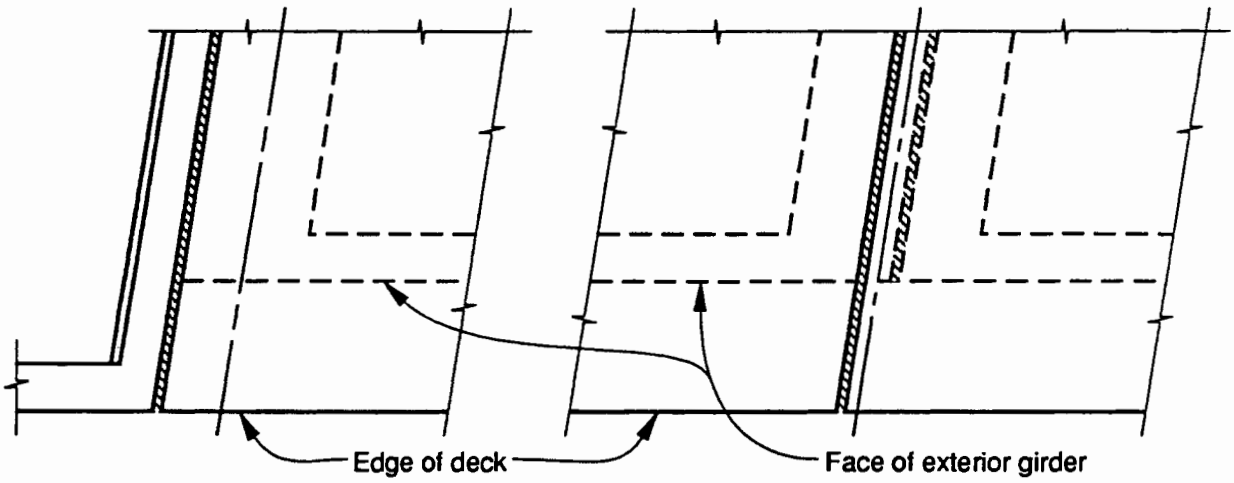

At Abutment **At Hinge**

SKEW UNDER 20°
(Vertical and Sloping Exterior Face)

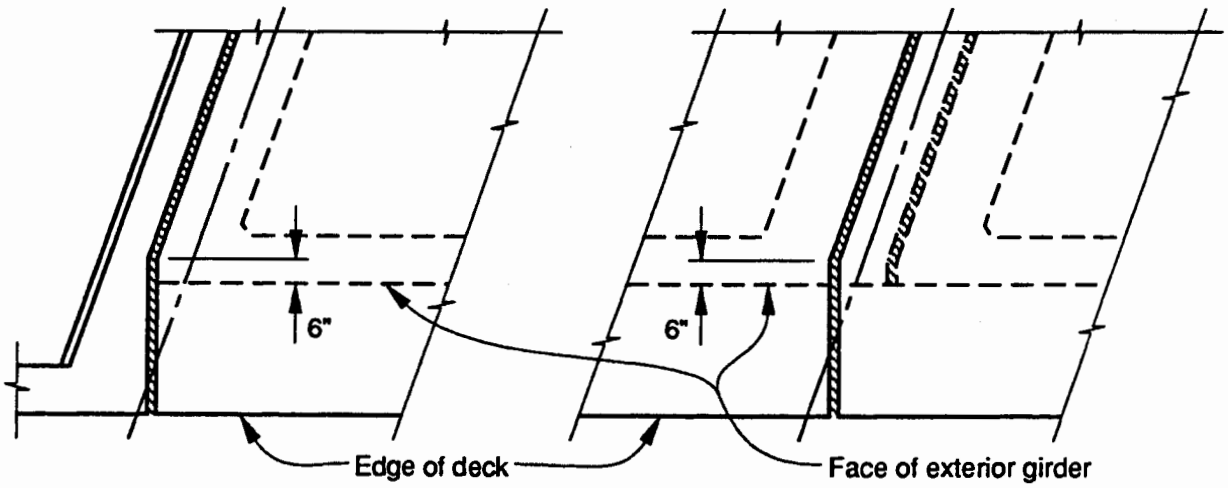

At Abutment **At Hinge**

SKEW OVER 20°
(Vertical Exterior Face Only)

Deck Joints
Cast-In-Place Concrete Girders

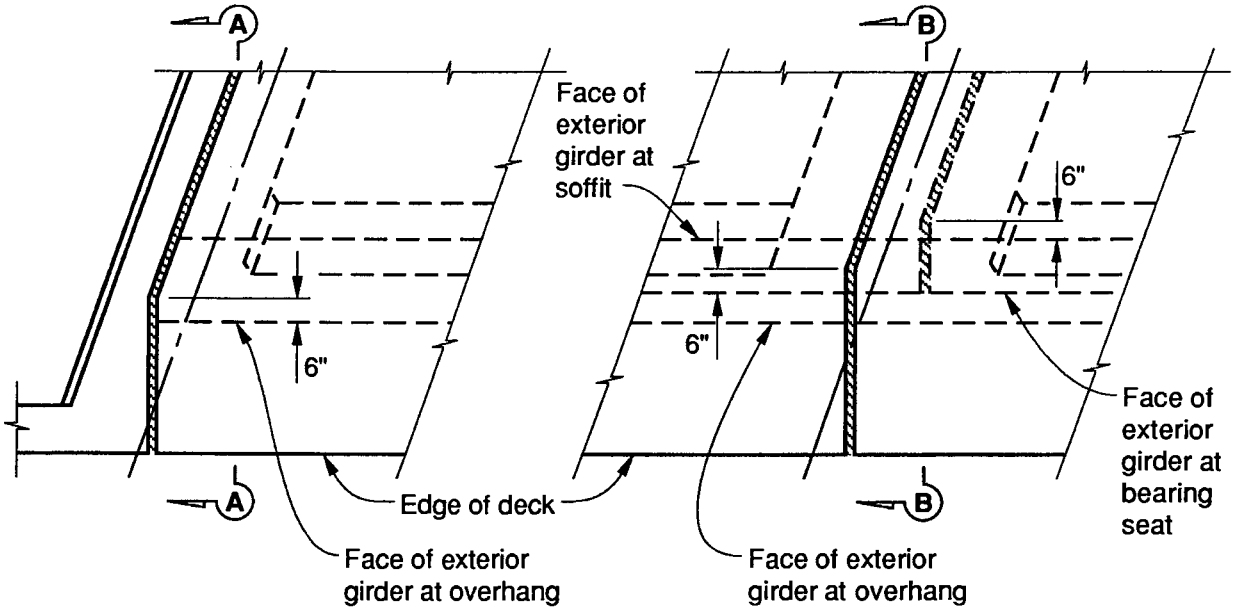

At Abutment **At Hinge**

SKEW OVER 20°
(Sloping Girder Face)

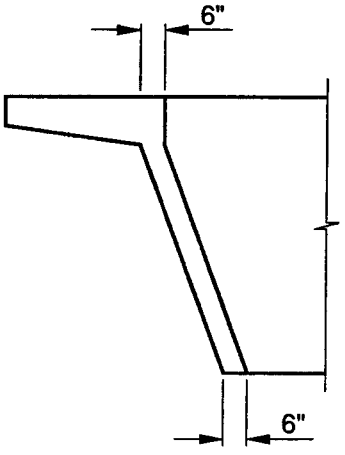

Section A-A

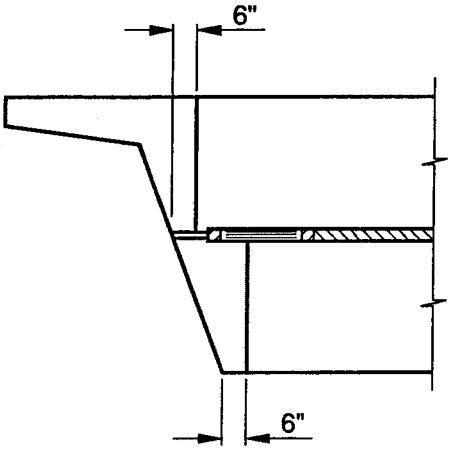

Section B-B

Deck Joints
Precast Concrete or Steel Girders

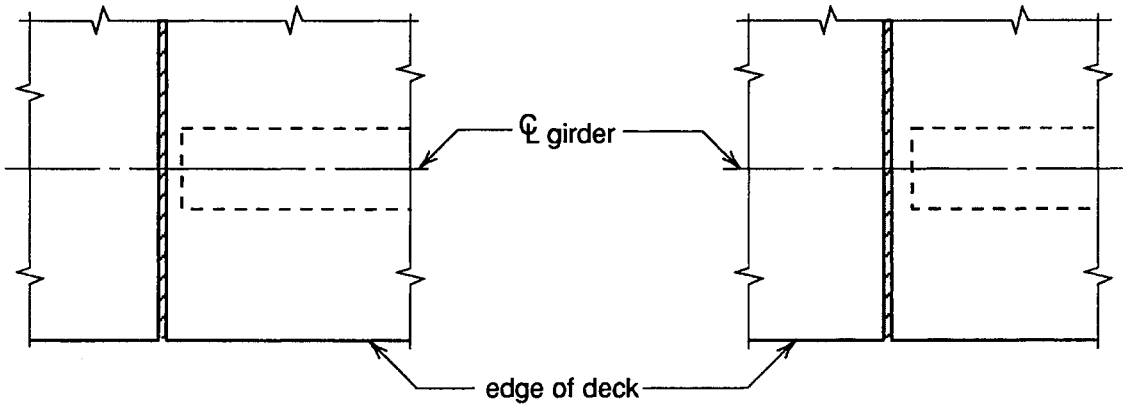

Steel Girder **Precast Concrete Girder**

No Skew

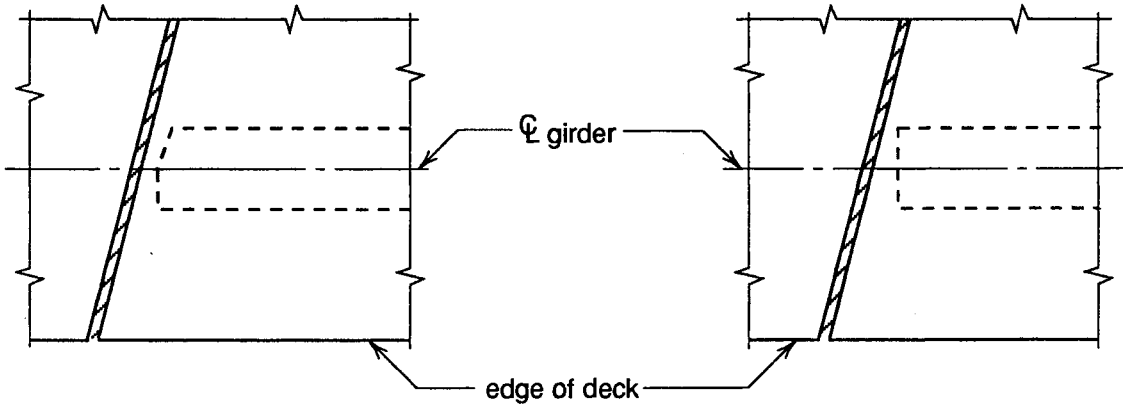

Steel Girder **Precast Concrete Girder**

Skew Under 20°

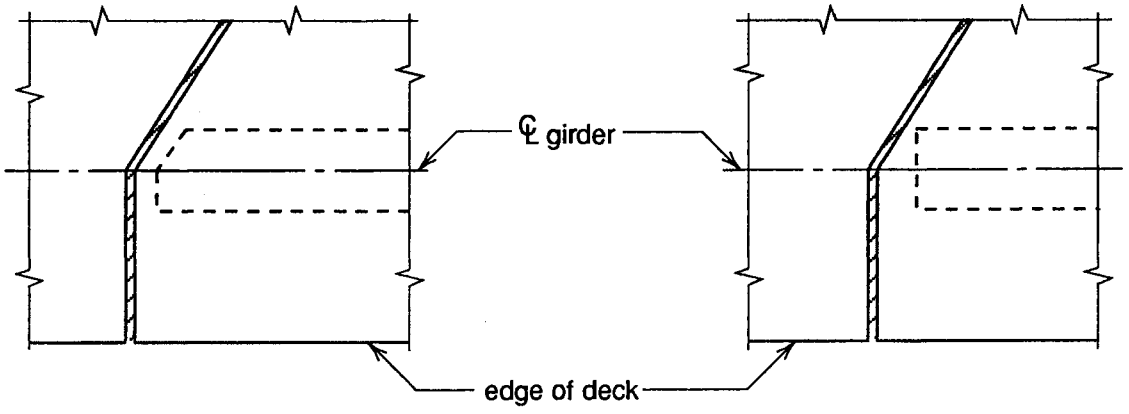

Steel Girder **Precast Concrete Girder**

Skew Over 20°

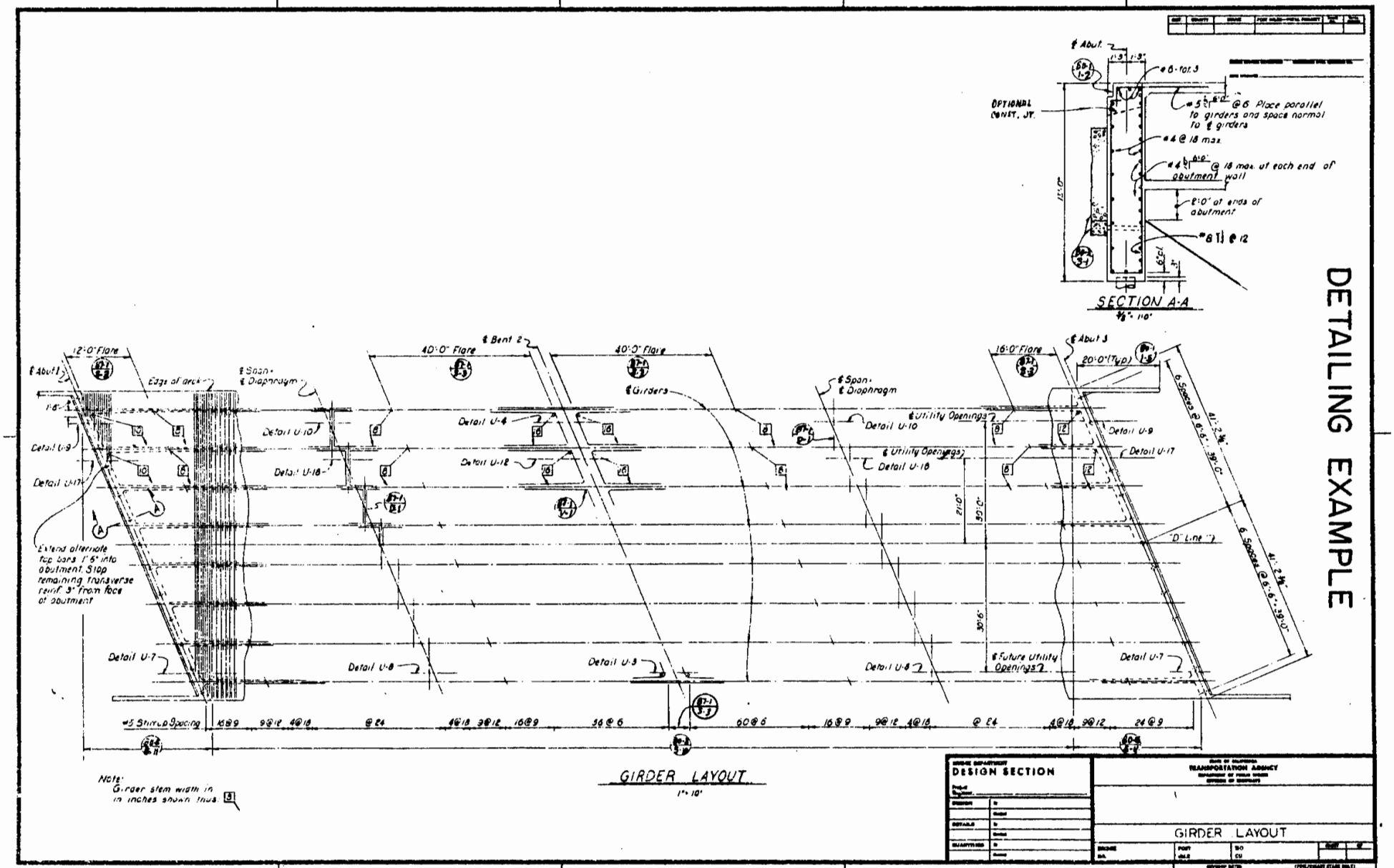

DETAILS SHOWN ARE FOR EXAMPLE ONLY
NOT TO BE USED FOR DESIGN PURPOSES