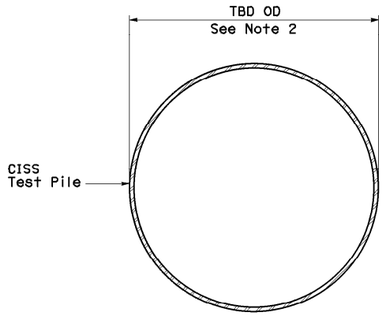

CISS TEST PILE
No Scale

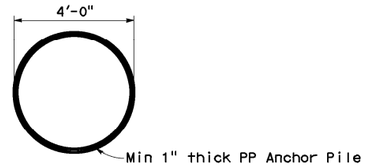

ANCHOR PILE
No Scale

NOTES:

1. The Load Test Pile and the Anchor Piles shall be driven to a minimum of (2xOD + 2ft) above original ground. After Pile Dynamic Analysis (PDA), the Load Test Pile and the Anchor Piles shall be cut as required for pile load testing.
2. Details shown are applicable for Test Piles 5 to 8 ft. in diameter.
3. For Test Pile and Anchor Piles locations and spacing, see "PILE DATA TABLE" and "FOUNDATION PLAN" sheet.
4. Furnished Anchor Piles Head lengths vary (final trim to be determined in the field).

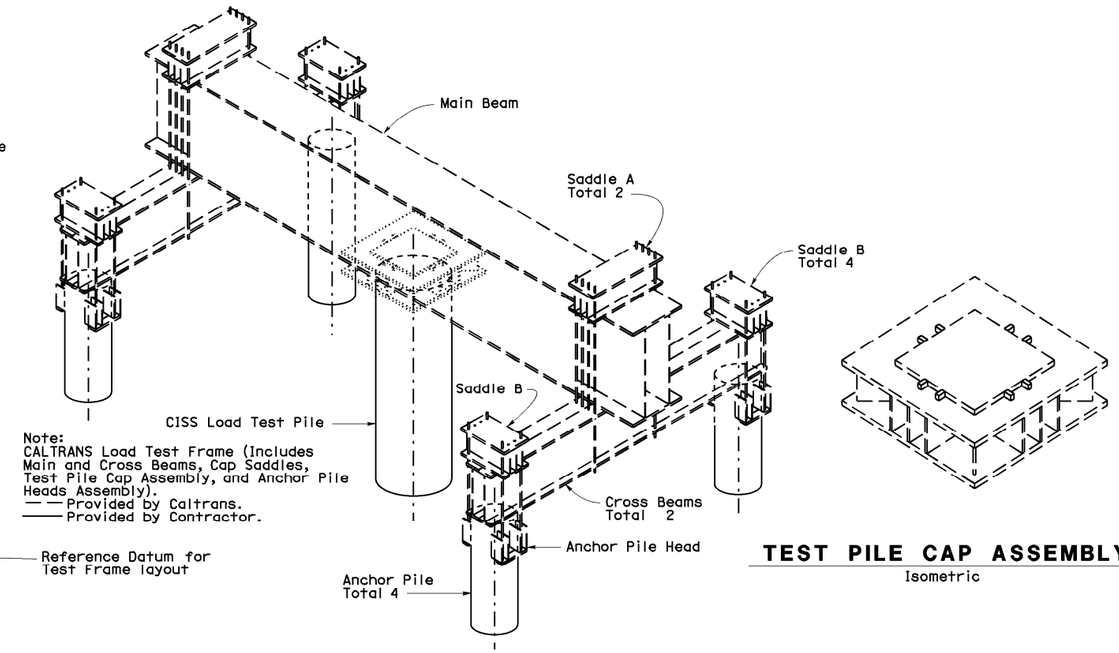

Note:
CALTRANS Load Test Frame (Includes Main and Cross Beams, Cap Saddles, Test Pile Cap Assembly, and Anchor Pile Heads Assembly).
— — Provided by Caltrans.
——— Provided by Contractor.

LOAD TEST FRAME ASSEMBLY
No Scale
(For Compression Pile Load Test only)

TEST PILE CAP ASSEMBLY
Isometric

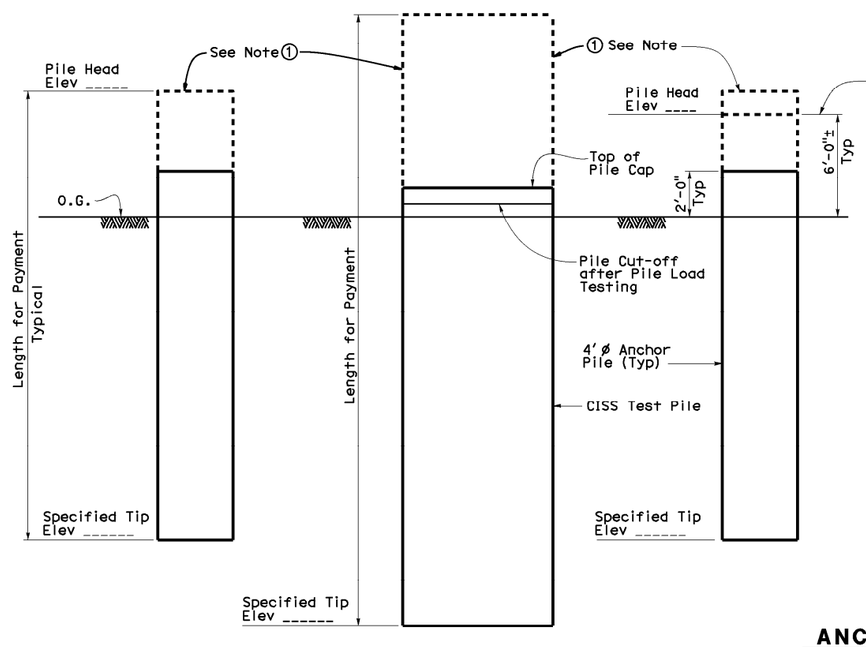

PILE LOAD TEST DETAIL
NO SCALE

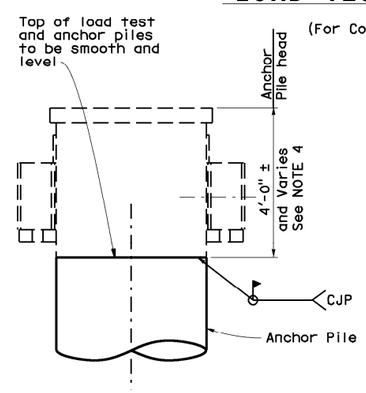

ANCHOR PILE HEAD ASSEMBLY
No Scale

DESIGN NOTES

MAXIMUM LOADING:	8000 kips Main Beam Jacking Load (Compression) 4000 kips Cross Beam Jacking Load
STRUCTURAL STEEL:	ASTM A709 Gr HPS 70W: fy = 70 ksi (Main Beam, Cross Beams, and Cap Saddles) ASTM A514 Grade Q : fy = 90 ksi (Top and Bottom Pile Cap Assembly) Rolled Steel Shell Segments: ASTM A252 Grade 3 Fy = 45 ksi, Fu = 66 ksi Or API 5L Grade X52 Fy = 52 ksi, Fu = 66 ksi

DRAFT
6-8-15

PILE LOAD TEST DETAILS UP TO 8000 KIPS COMPRESSION