DIST	COUNTY	ROUTE	KILOMETER POST TOTAL PROJECT	SHEET NO.	TOTAL SHEETS

Caltrans Metric

Jeffrey B. Woody
REGISTERED CIVIL ENGINEER

October 26, 2000
PLANS APPROVAL DATE

REGISTERED PROFESSIONAL ENGINEER Jeffrey B. Woody No. C41260 Exp. 3-31-03 CIVIL STATE OF CALIFORNIA

The State of California or its officers or agents shall not be responsible for the accuracy or completeness of electronic copies of this plan sheet.

To accompany plans dated _____

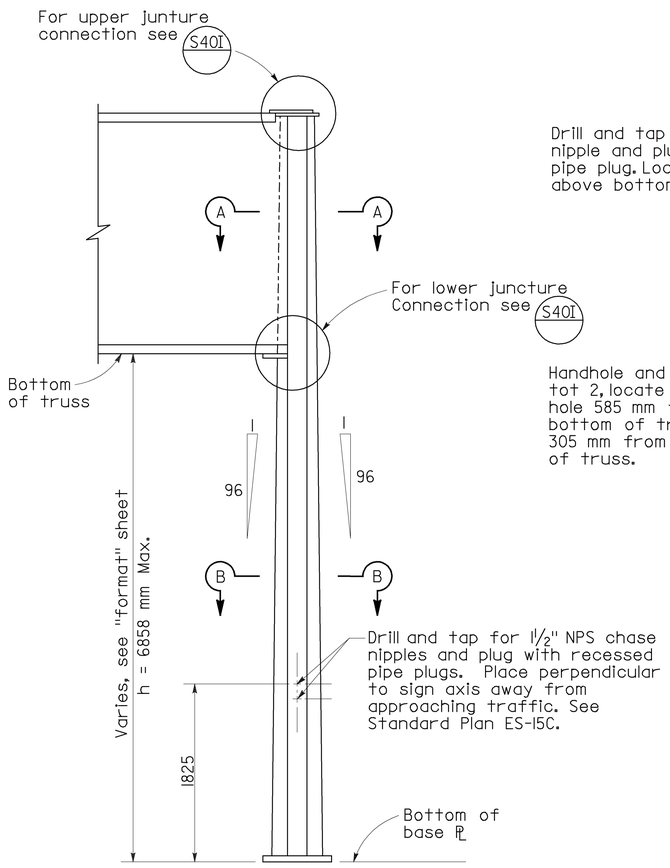

ELEVATION

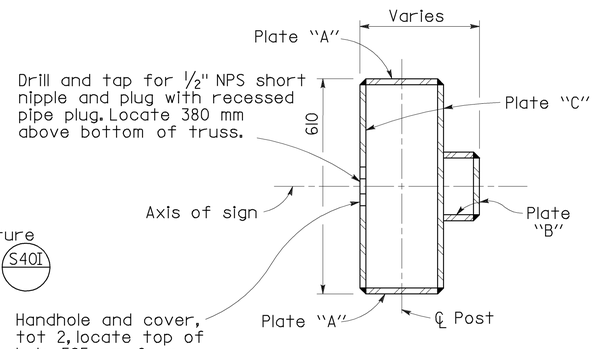

SECTION A-A

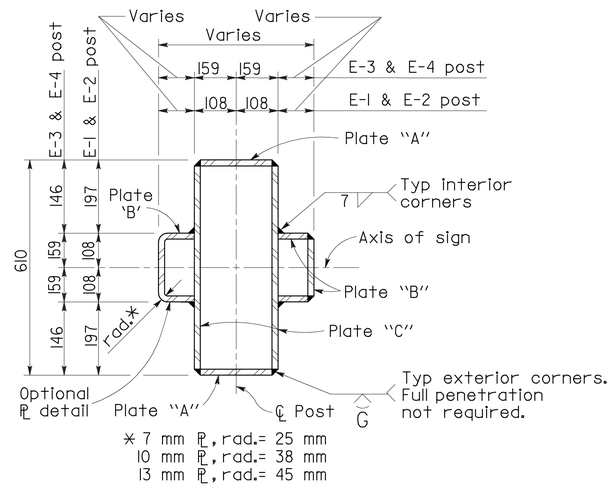

SECTION B-B

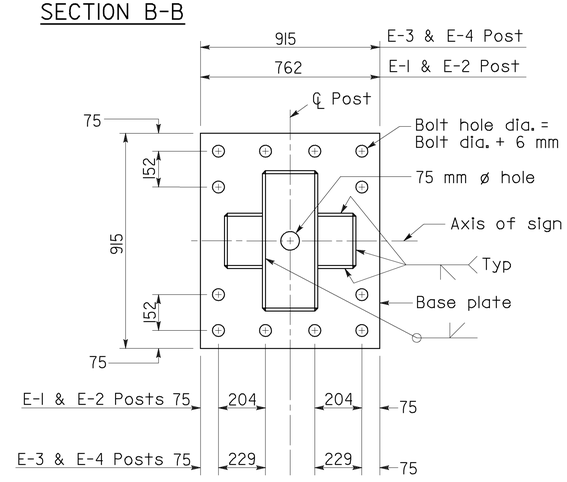

BASE PLATE

Post Type	Base Plate (mm)	Plate "A" (mm)	Plate "B" (mm)	Plate "C" (mm)	* Anchor Bolts (mm)
E-1	51x762x915	12.7	6.4	9.5	12-45 mm ø
E-2	64x762x915	25.4	9.5	12.7	12-51 mm ø
E-3	64x915x915	25.4	9.5	12.7	12-57 mm ø
E-4	64x915x915	25.4	12.7	15.9	12-57 mm ø

* 51mm ø Anchor bolts may be substituted for 45 mm ø bolts.

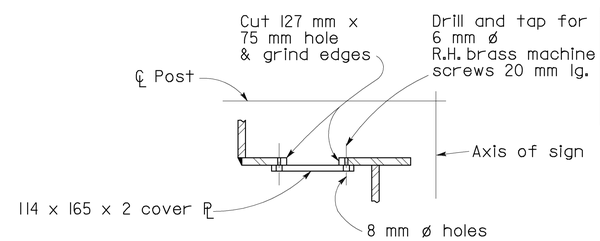

NOTE

Face handhole and cover PL away from traveled way except as shown. See "Section A-A".

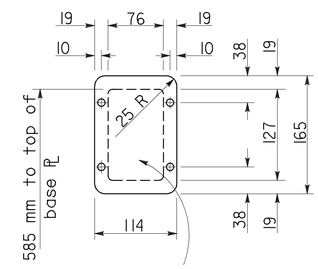

Handhole 305 mm from top of truss. Opening may be widened to 127 mm x 127 mm and cover to 165 mm x 165 mm

HANDHOLE AND COVER DETAIL

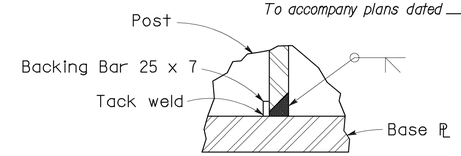

POST TO BASE PLATE WELDING DETAILS

NOTE

1. For foundation details see S39

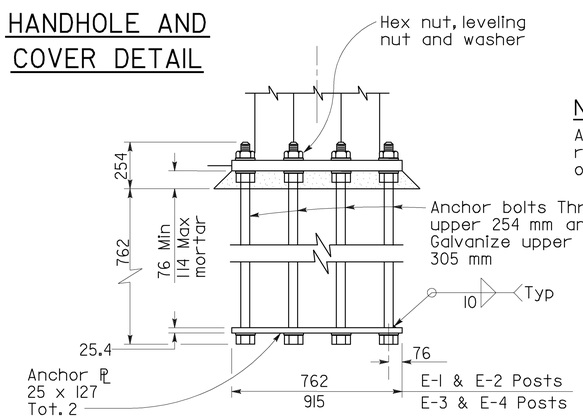

NOTE

Anchor PLs may be retained with hex nuts or formed heads.

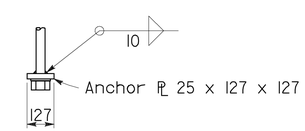

SINGLE SIDE BOLT

ANCHORAGE DETAILS

STATE OF CALIFORNIA
DEPARTMENT OF TRANSPORTATION

OVERHEAD SIGNS-BOX BEAM CLOSED TRUSS SINGLE POST CANTILEVER POST DETAILS

NO SCALE

ALL DIMENSIONS ARE IN MILLIMETERS UNLESS OTHERWISE SHOWN

RSP S40J DATED OCTOBER 26, 2000 SUPERSEDES STANDARD PLAN S40J DATED JULY 1, 1999-PAGE 252 OF THE STANDARD PLANS BOOK DATED JULY 1999.

REVISED STANDARD PLAN RSP S40J

1999 STD. PLAN RSP S40J