POST SIZE		PILE FOUNDATION				SPREAD FOOTING				
NPS	"t" (mm)	Pedestal (mm)	Pile Dia (mm)	Pile Depth (m)	Vertical Reinf	Pedestal (mm)	Footing (m)	Reinforcement		
								Top	Bottom	L Bar
6	7.11	864 x 864	762	3.0	#19	762 x 762	1.3 x 1.9	#16	#16	#16
6	10.97	864 x 864	762	3.0	#19	762 x 762	1.3 x 2.2	#16	#16	#16
8	8.18	864 x 864	762	3.0	#19	762 x 762	1.6 x 2.5	#16	#16	#16
8	12.7	864 x 864	762	3.4	#22	762 x 762	1.9 x 2.8	#16	#16	#16
10	12.7	1016 x 1016	914	4.0	#25	914 x 914	2.2 x 3.1	#16	#25	#25
12	12.7	1016 x 1016	914	4.6	#32	914 x 914	2.2 x 3.7	#19	#25	#25
14	12.7	1016 x 1016	914	4.6	#32	914 x 914	2.2 x 4.0	#25	#29	#25
14	15.88	1016 x 1016	914	4.9	#32	914 x 914	2.5 x 4.3	#25	#29	#25

NOTES

1. Backfill shall be in place prior to erection of post.
2. Slope protection required when indicated on the plans.
3. Pile pedestal shall be formed 155 mm minimum below ground surface. Remainder to be placed against undisturbed material.

Caltrans Metric

DIST	COUNTY	ROUTE	KILOMETER POST TOTAL PROJECT	SHEET NO.	TOTAL SHEETS

REGISTERED CIVIL ENGINEER

October 26, 2000
PLANS APPROVAL DATE

REGISTERED PROFESSIONAL ENGINEER Jeffrey B. Woody No. C41260 Exp. 3-31-03 CIVIL STATE OF CALIFORNIA

The State of California or its officers or agents shall not be responsible for the accuracy or completeness of electronic copies of this plan sheet.

To accompany plans dated _____

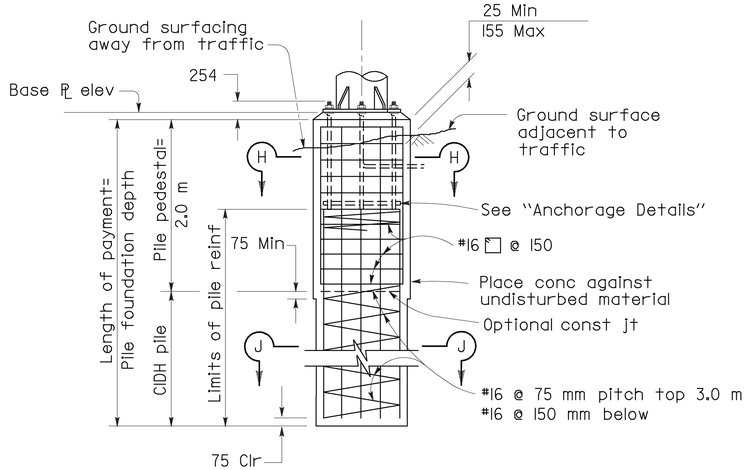

ELEVATION

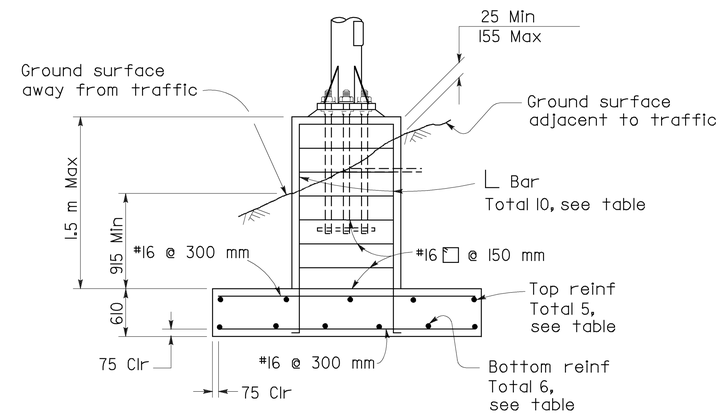

ELEVATION

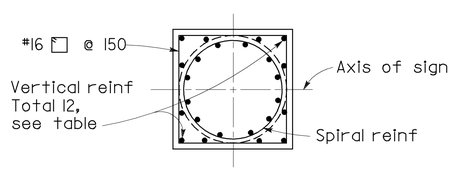

SECTION H-H

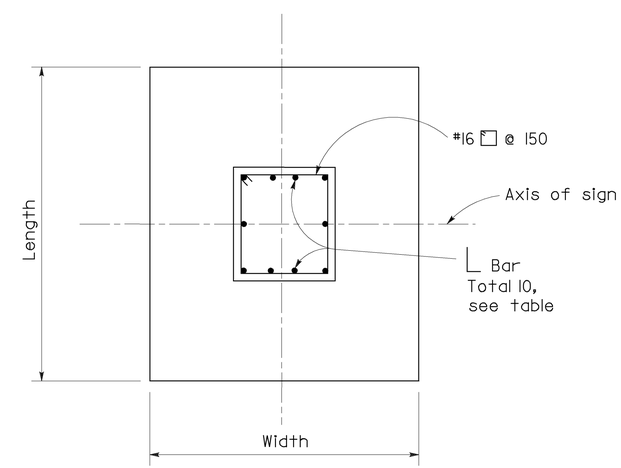

PLAN
SPREAD FOOTING

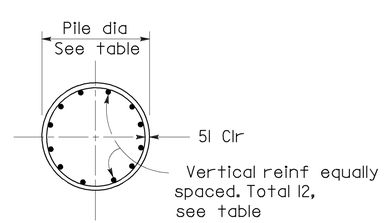

SECTION J-J
6 NPS THRU 14 NPS POSTS
PILE FOUNDATION

STATE OF CALIFORNIA
DEPARTMENT OF TRANSPORTATION

OVERHEAD SIGNS-LIGHTWEIGHT FOUNDATION DETAILS

NO SCALE

ALL DIMENSIONS ARE IN MILLIMETERS UNLESS OTHERWISE SHOWN

RSP S20B DATED OCTOBER 26, 2000 SUPERSEDES STANDARD PLAN S20B DATED JULY 1, 1999-PAGE 241 OF THE STANDARD PLANS BOOK DATED JULY 1999.

REVISED STANDARD PLAN RSP S20B

1999 REVISED STD. PLAN RSP S20B