DIST	COUNTY	ROUTE	KILOMETER POST TOTAL PROJECT	SHEET NO.	TOTAL SHEETS

Caltrans Metric

To accompany plans dated _____

Jeffrey B. Woody
REGISTERED CIVIL ENGINEER

October 26, 2000
PLANS APPROVAL DATE

REGISTERED PROFESSIONAL ENGINEER Jeffrey B. Woody No. C41260 Exp. 3-31-03 CIVIL STATE OF CALIFORNIA

The State of California or its officers or agents shall not be responsible for the accuracy or completeness of electronic copies of this plan sheet.

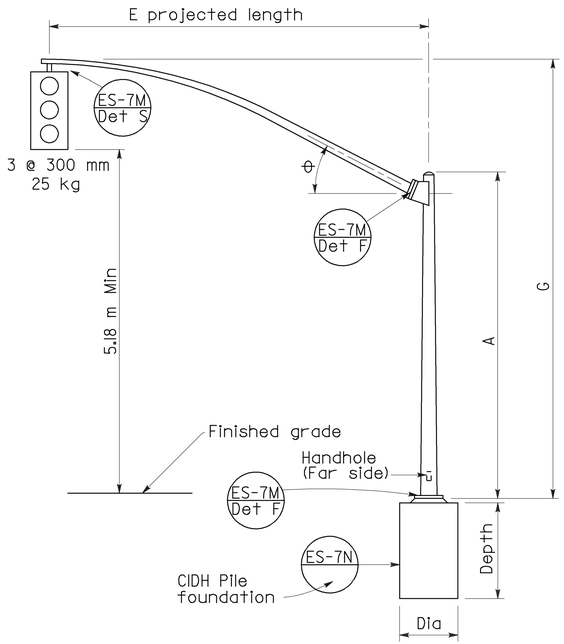

ELEVATION

TYPE 18-1-129

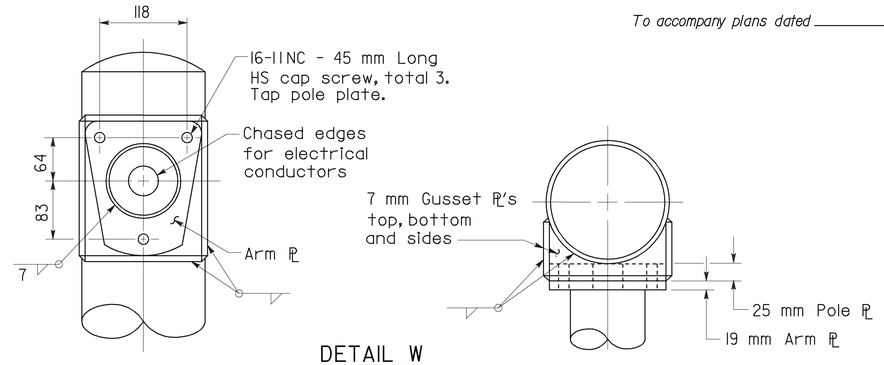

DETAIL W

LUMINAIRE ARM CONNECTION

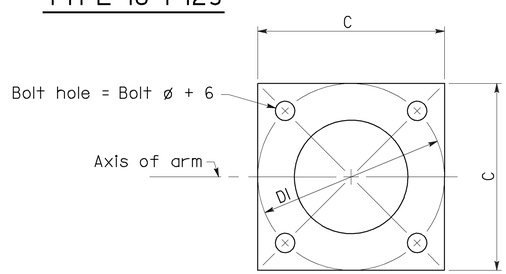

BASE PLATE

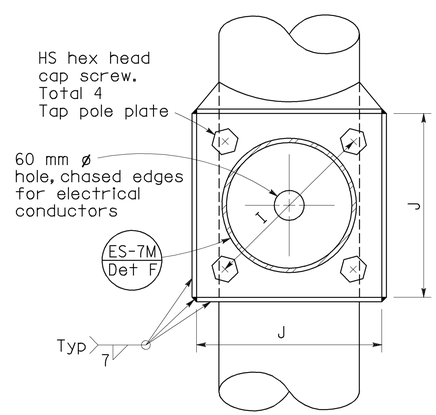

SECTION A-A

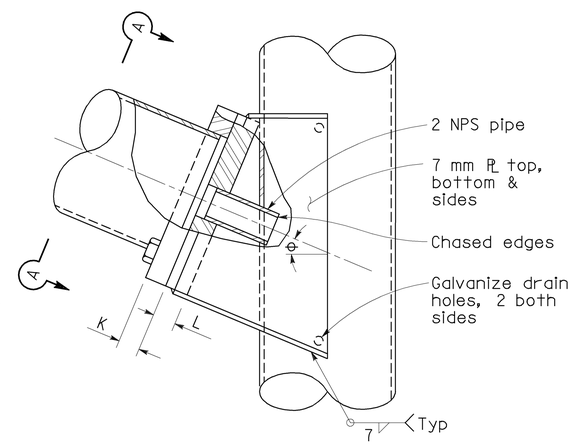

ELEVATION

SIGNAL ARM CONNECTION DETAILS

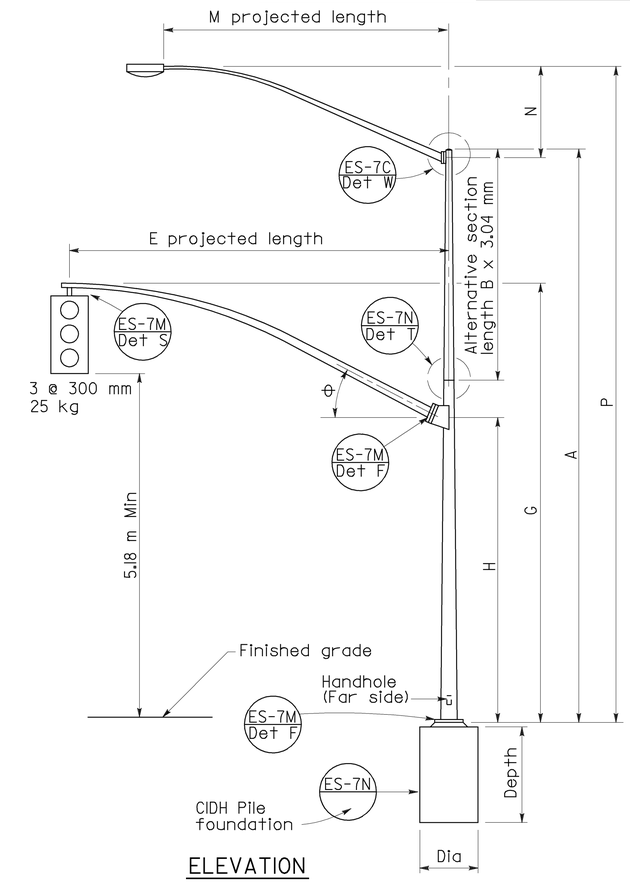

ELEVATION

TYPE 19-1-129, 19A-1-129

HIGH STRENGTH CAP SCREWS

16 - 11NC - 45

Length (mm)
Threads (per inch)
Size (mm)

SIGNAL ARM DATA										
E Projected Length	G Mounting Height	H	Min OD At Pole	Thickness	I Bolt Circle	HS Cap Screws	J Plate Size	K Arm PL Thickness	L Pole PL Thickness	θ
(m)			(mm)							
4.6	6.8 ±	4.9	178	3.04	305	32-7NC-76	305	32	38	23°
6.1	6.6 ±		181							
7.6	6.9 ±		186							
9.1	7.0 ±		203							

LUMINAIRE ARM DATA					
M Projected Length	N Rise	Min OD at Pole	Thickness	P Mounting Height 9.1 Pole	P Mounting Height 10.7 Pole
(m)	(mm)			(m)	
1.8	610 ±	83	3.04	9.6 ±	11.1 ±
2.4	760 ±	89		9.8 ±	11.3 ±
3.1	990 ±	98		10.0 ±	11.5 ±
3.7	1290 ±			10.3 ±	11.8 ±
4.6	1450 ±	108		10.5 ±	12.0 ±

Pole Type	Load Case	Wind Velocity km/h	POLE DATA A Height	Min OD Base	Min OD Top	Thickness	Alternative Section B Length	Alternative Section Bottom	Alternative Section Top	BASE PLATE DATA C	DI Bolt Circle	Thickness	Anchor Bolts Size	Luminaire Arm	Signal Arm	CIDH PILE FOUNDATION Diameter	Depth	Reinforced
			(m)	(mm)			(m)	(mm)		(mm)				(m)		(mm)	(m)	
18-1-129	1	129	5.2	273	214	4.55	None	203	168	457	445	32	38 ø x 1067 x 152	None	7.6 or 9.1	760	2.2	Yes
19-1-129			9.1		168		3.0							1.8-4.6 [3.7]				
19A-1-129			10.7		151		4.6		151					1.8-4.6 [4.6]				

☐ Indicates arm length to be used unless otherwise noted on plans.

STATE OF CALIFORNIA
DEPARTMENT OF TRANSPORTATION

SIGNAL AND LIGHTING STANDARDS
CASE 1 ARM LOADING
WIND VELOCITY=129 km/h
ARM LENGTHS 4.6 m TO 9.1 m

NO SCALE

ALL DIMENSIONS ARE IN MILLIMETERS UNLESS OTHERWISE SHOWN

RSP ES-7C DATED OCTOBER 26, 2000 SUPERSEDES STANDARD PLAN ES-7C DATED JULY 1, 1999-PAGE 302 OF THE STANDARD PLANS BOOK DATED JULY 1999.

REVISED STANDARD PLAN RSP ES-7C

1999 STD. PLAN RSP ES-7C