Post Type	Pole Data (mm)			Base Plate Data (mm)					CIDH Pile Data		
	Height "H" (m)	Min OD Base	Min Thickness Base	Dia	Thickness	Anchor Bolts			"D" (mm)	"L" (m)	Pile Reinf
						Total	Size "d"	BC			
HM 80	24.4	457	4.8	775	51	4	51	635	1070	3.0	10-#25
HM 100	30.5	495	4.8	775	51	6	51	635	1070	3.3	13-#25
HM 120	36.6	565	6.4	953	51	6	51	812	1220	3.6	20-#25
HM 160	48.8	673	6.4	1092	64	6	64	914	1370	4.5	25-#25

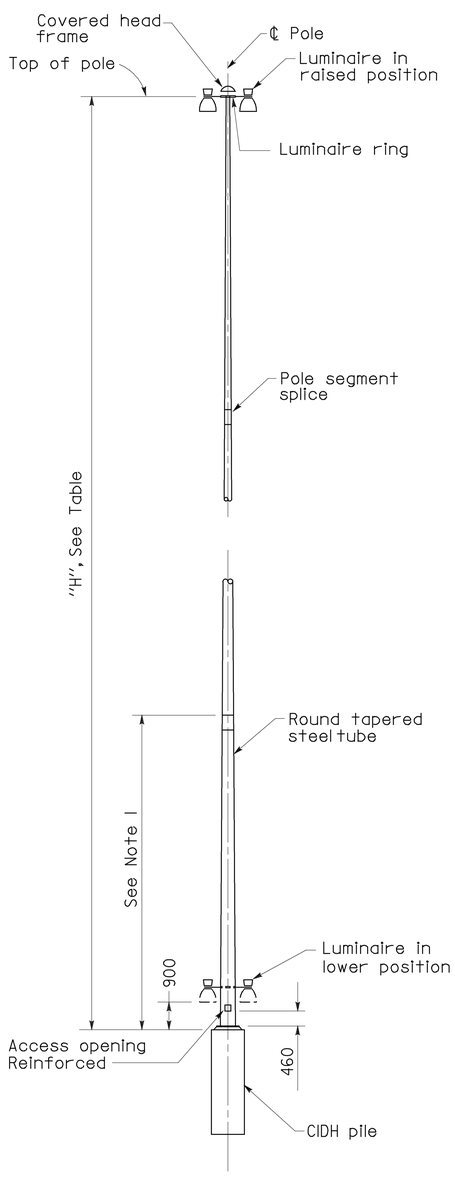

POLE DETAILS

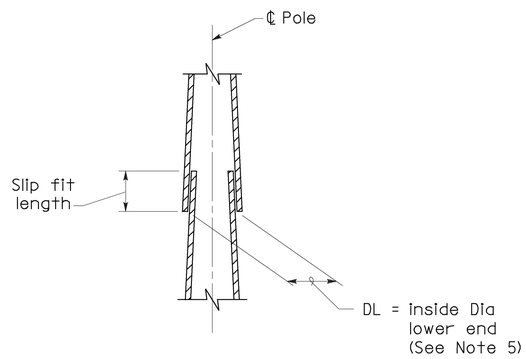

POLE SEGMENT SPLICE DETAIL

See Note 5

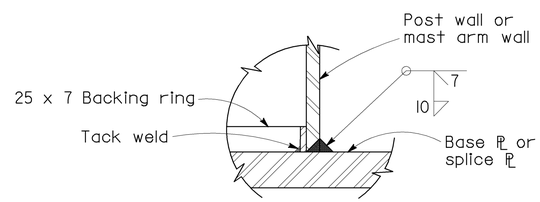

WELD DETAIL

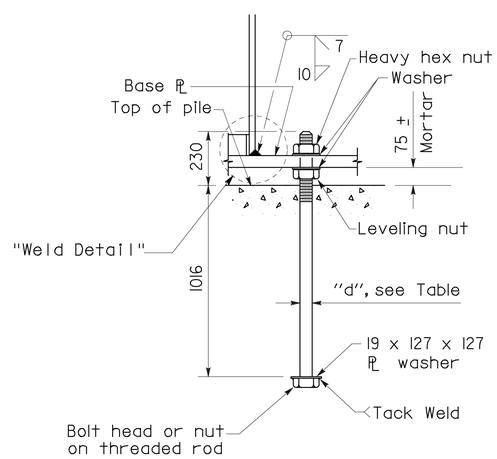

ANCHOR BOLT DETAIL

To accompany plans dated _____

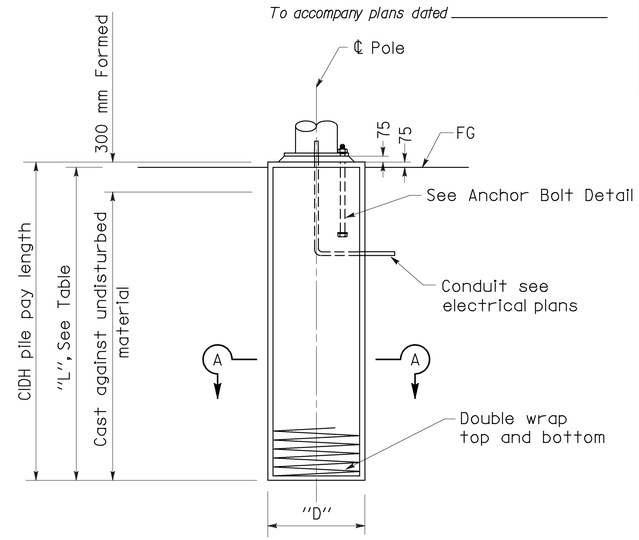

TYPICAL ELEVATION

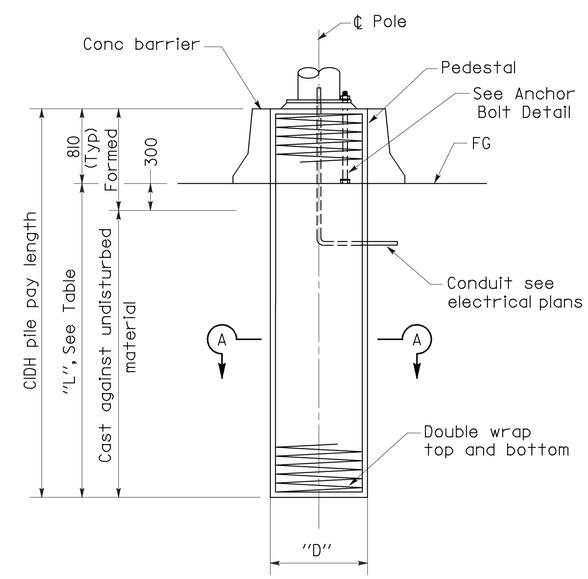

MEDIAN LOCATION

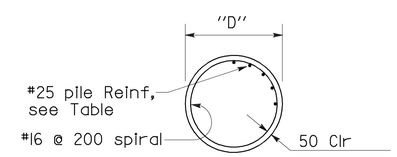

SECTION A-A

CIDH PILE DETAILS

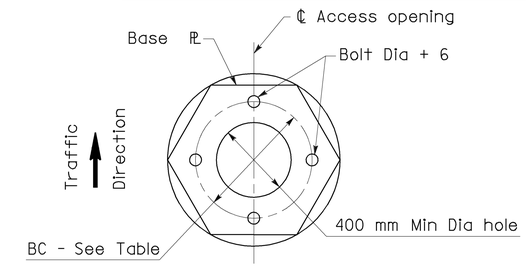

4 BOLTS

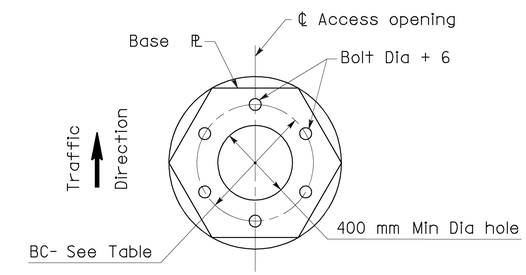

6 BOLTS

BASE PLATE DETAILS

See Note 6

NOTES

1. Pole details shall suit the lowering device and this foundation plan. Pole details shall be submitted to the Engineer for approval.
2. Pole finish shall be galvanized.
3. For number of luminaires to be mounted on the pole, see Electrical Plans.
4. Foundation design is based on a maximum of 10 luminaires. Design wind velocity 129 km/h.
5. Slip fit length shall not be less than 1.5 DL minus 50 mm.
6. Base plate shape optional.

STATE OF CALIFORNIA
DEPARTMENT OF TRANSPORTATION

LIGHTING STANDARDS 24.4 m TO 48.8 m HIGH MAST LIGHT POLE FOUNDATION DETAILS

NO SCALE

ALL DIMENSIONS ARE IN MILLIMETERS UNLESS OTHERWISE SHOWN

RSP ES-6J DATED OCTOBER 26, 2000 SUPERSEDES STANDARD PLAN ES-6J DATED JULY 1, 1999-PAGE 298 OF THE STANDARD PLANS BOOK DATED JULY 1999.

REVISED STANDARD PLAN RSP ES-6J

Caltrans Metric

DIST	COUNTY	ROUTE	KILOMETER POST TOTAL PROJECT	SHEET NO.	TOTAL SHEETS

Jeffrey B. Woody
REGISTERED CIVIL ENGINEER

October 26, 2000
PLANS APPROVAL DATE

REGISTERED PROFESSIONAL ENGINEER Jeffrey B. Woody No. C41260 Exp. 3-31-03 CIVIL STATE OF CALIFORNIA

The State of California or its officers or agents shall not be responsible for the accuracy or completeness of electronic copies of this plan sheet.

1999 STD. PLAN RSP ES-6J