DIST	COUNTY	ROUTE	KILOMETER POST TOTAL PROJECT	SHEET NO.	TOTAL SHEETS

Caltrans Metric

Jeffrey B. Woody
REGISTERED CIVIL ENGINEER

October 26, 2000
PLANS APPROVAL DATE

REGISTERED PROFESSIONAL ENGINEER
Jeffrey B. Woody
No. C41260
Exp. 3-31-03
CIVIL
STATE OF CALIFORNIA

The State of California or its officers or agents shall not be responsible for the accuracy or completeness of electronic copies of this plan sheet.

To accompany plans dated _____

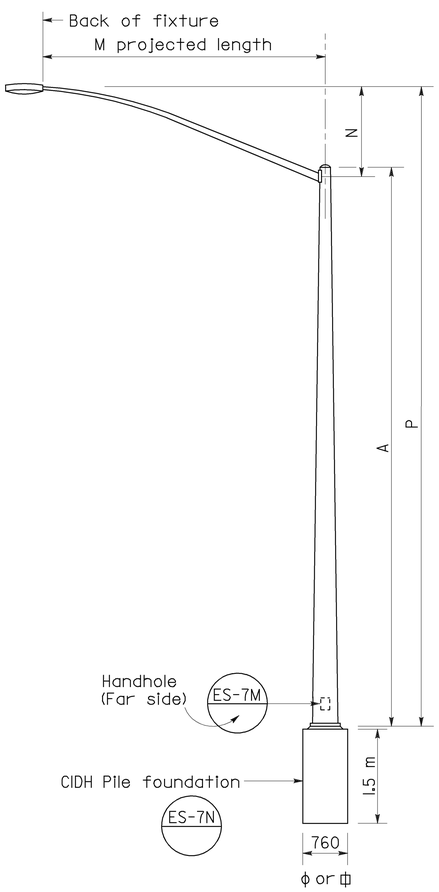

ELEVATION
TYPE 15
TYPE 22

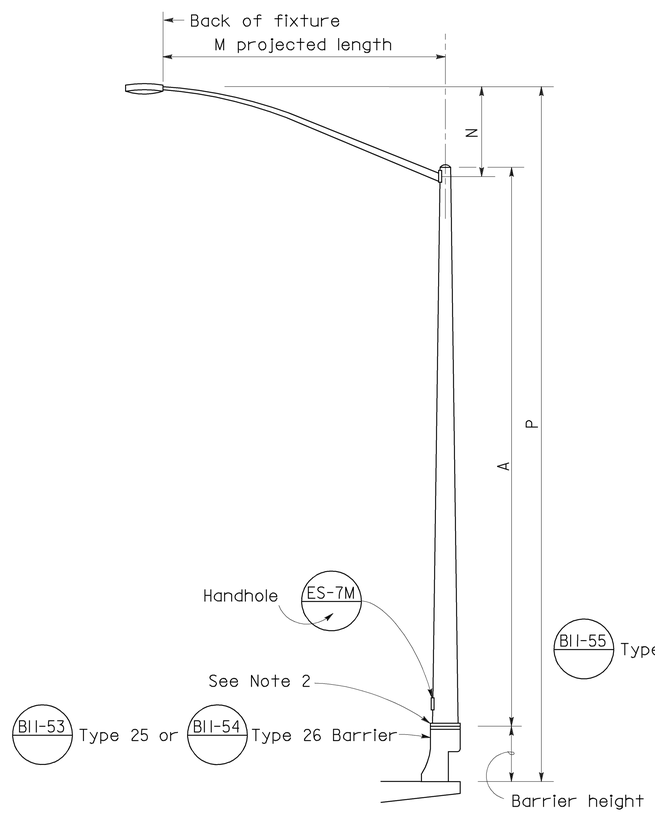

ELEVATION
TYPE 15 BARRIER RAIL MOUNTED
TYPE 21 BARRIER RAIL MOUNTED

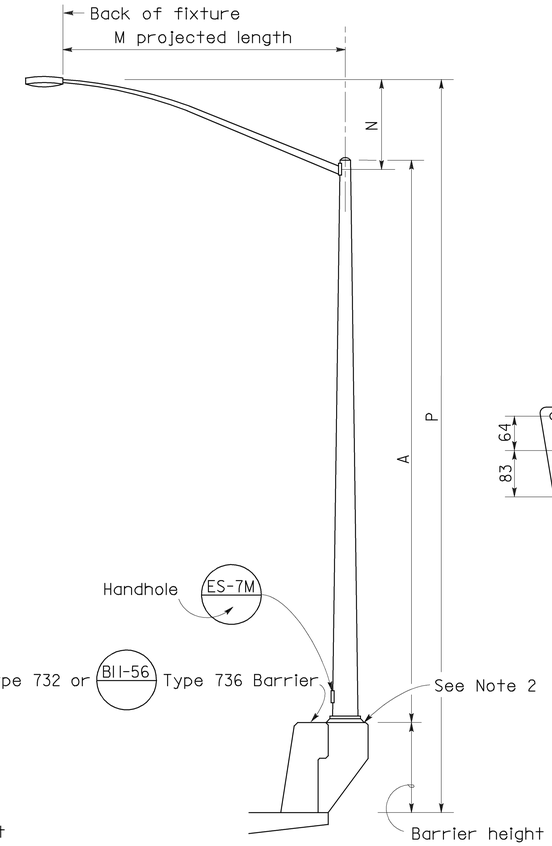

ELEVATION
TYPE 15 BARRIER RAIL MOUNTED
TYPE 21 BARRIER RAIL MOUNTED

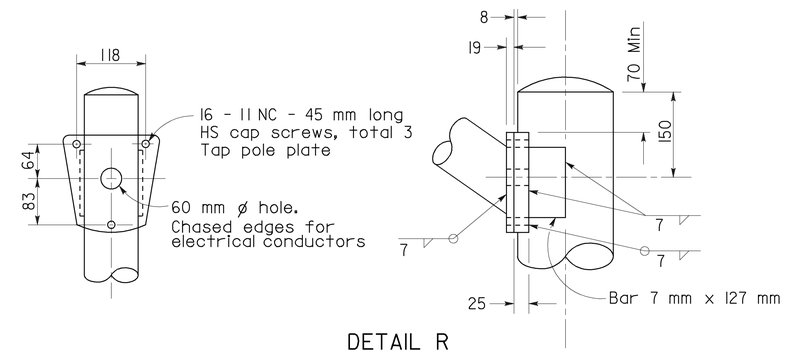

DETAIL R
LUMINAIRE ARM CONNECTION

HIGH STRENGTH CAP SCREWS
16 - 11NC - 45
Length (mm)
Threads (per inch)
Size (mm)

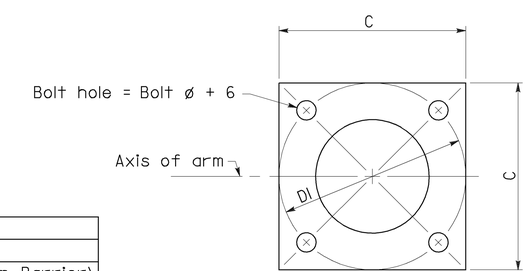

BASE PLATE

POLE TYPE	POLE DATA				BASE PLATE DATA				LUMINAIRE ARM	
	A Height	MIN OD Base	MIN OD Top	Wall Thickness	C	DI Bolt Circle	Thick-ness	Anchor Bolts Size		
	m	mm	mm	mm	mm				m	
15	9.1	203	98	3.04	305	280	25	25 ø x 920 x 102*	1.8-4.6	3.7
21	10.7	219	98	3.04	305	305	25	32 ø see Note 2	1.8-4.6	3.7
22	10.7	219	98	3.04	305	305	25	32 ø x 920 x 102	1.8-4.6	3.7

* For barrier rail mount, see Note 2.

LUMINAIRE ARM DATA							
M Projected Length	N Rise	Min OD At Pole	Nominal Thickness	P Mounting Height			
				Type 15	Type 22	Type 15 (810 mm Barrier)	Type 21 (810 mm Barrier)
m	mm	mm	mm	m	m	m	m
1.8	610 ±	83	3.04	9.6 ±	11.1 ±	10.4 ±	11.9 ±
2.4	760 ±	89	3.04	9.8 ±	11.3 ±	10.5 ±	12.1 ±
3.1	990 ±	98	3.04	10.0 ±	11.5 ±	10.7 ±	12.3 ±
3.7	1290 ±	98	3.04	10.3 ±	11.8 ±	11.0 ±	12.6 ±
4.6	1450 ±	108	3.04	10.4 ±	12.0 ±	11.2 ±	12.8 ±

NOTES

1. ☐ indicates arm length to be used unless otherwise noted on the plans.
2. For anchorage details see ES-6B.
3. See ES-6B when Type 15 is to be mounted on bridge railing.
4. For Type 15-SB, use Type 15 standard with Type 30 base plate details, see Standard Plan ES-6F.
5. For additional notes see Standard Plan ES-7M and ES-7N.
6. For Type 15-SBI, see Standard Plan ES-6C.

STATE OF CALIFORNIA
DEPARTMENT OF TRANSPORTATION

LIGHTING STANDARDS TYPES 15, 21 AND 22

NO SCALE

ALL DIMENSIONS ARE IN MILLIMETERS UNLESS OTHERWISE SHOWN

RSP ES-6A DATED OCTOBER 26, 2000 SUPERSEDES STANDARD PLAN ES-6A DATED JULY 1, 1999-PAGE 289 OF THE STANDARD PLANS BOOK DATED JULY 1999.

REVISED STANDARD PLAN RSP ES-6A

1999 STD. PLAN RSP ES-6A