DIST	COUNTY	ROUTE	KILOMETER POST TOTAL PROJECT	SHEET NO.	TOTAL SHEETS

Caltrans Metric

Overcomer Y. Hor
REGISTERED CIVIL ENGINEER

October 26, 2000
PLANS APPROVAL DATE

REGISTERED PROFESSIONAL ENGINEER — Overcomer Y. Hor — No. C45803 — Exp. 12-31-02 — CIVIL — STATE OF CALIFORNIA

The State of California or its officers or agents shall not be responsible for the accuracy or completeness of electronic copies of this plan sheet.

To accompany plans dated _____

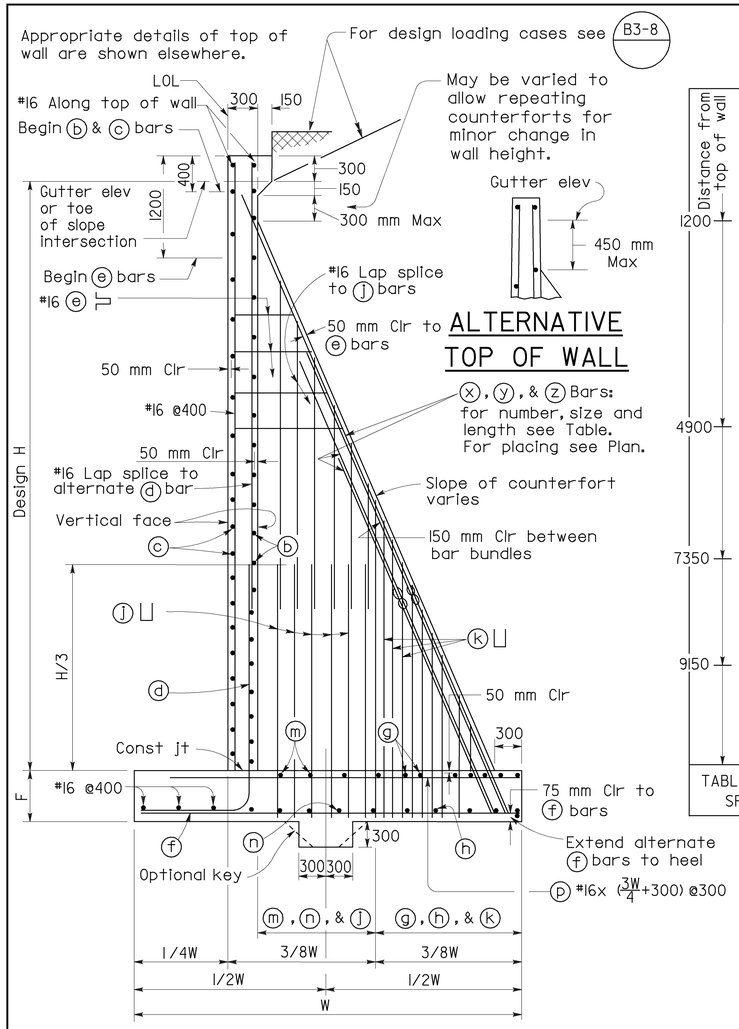

SPREAD FOOTING SECTION

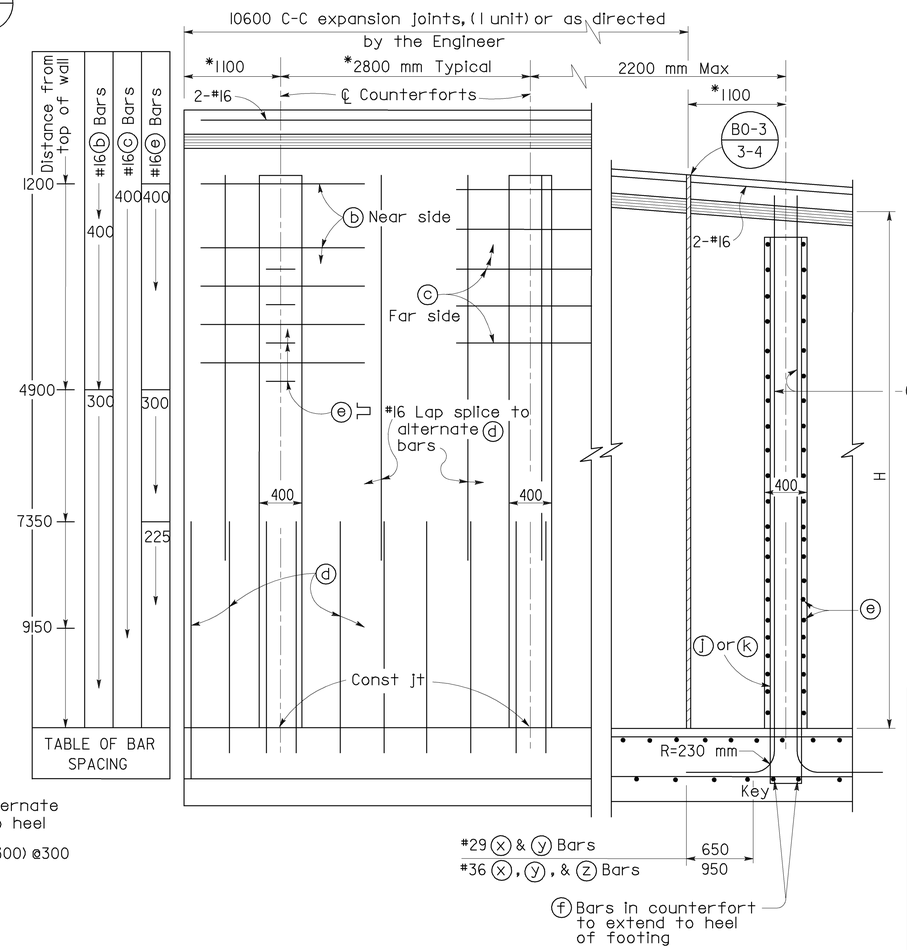

ELEVATION

Distance from top of wall	#16ⓑ Bars	#16ⓒ Bars	#16ⓔ Bars
1200	400	400	400
4900	300		300
7350			225
9150			

TABLE OF BAR SPACING

*Dimensions 2800 mm and 1100 mm may be decreased proportionally but not increased without a special design.

Use footing dimensions and reinforcing and stem reinforcing in any unit as determined by maximum Design "H" in that unit. Use counterfort ⓧ, ⓨ, and ⓩ bars as determined by "H" at ℄ counterfort.

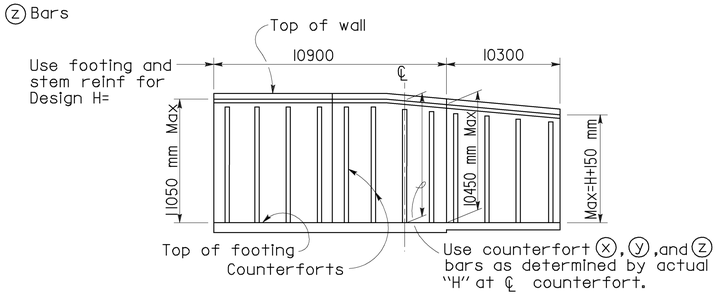

TABLE OF REINFORCING STEEL, DIMENSIONS AND DATA

Design H	5500	6100	6700	7300	7900	8500	9100	9700	10300	10900
W	3500	3800	4100	4450	4750	5050	5350	5650	5950	6250
F	400	400	450	450	500	550	650	700	750	850
ⓓ Bars, counterfort stem	#16@300	#16@300	#16@275	#16@225	#16@200	#16@175	#19@225	#19@200	#25@275	#25@250
ⓕ Bars, bottom toe	#19@300	#19@200	#25@275	#25@225	#25@200	#25@175	#25@225	#25@200	#29@275	#29@250
ⓕ Bars, length } Alt	1700	1900	2100	2400	2500	2600	2700	2800	3000	3100
ⓕ Bars, length } Alt	3350	3650	3950	4300	4600	4900	5200	5500	5800	6100
ⓖ Bars, top of heel	#19@200	—	—	—	—	—	—	—	—	→
ⓗ Bars, bottom heel	#19@200	—	—	—	—	—	—	—	—	→
ⓙ Bars, counterfort heel	#16@400	#16@400	#16@400	#16@350	#16@300	#16@300	#19@400	#19@400	#19@350	#19@350
ⓚ Bars, counterfort heel	#16@200	#16@200	#16@200	#16@175	#16@150	#16@150	#19@200	#19@200	#19@175	#19@175
ⓜ Bars, top of heel	#16@250	—	—	—	—	—	—	—	—	→
ⓝ Bars, bottom of heel	#16@350	—	—	—	—	—	—	—	—	→
ⓧ Bar	2-#29	2-#29	2-#29	2-#29	2-#36	2-#36	2-#36	2-#36	2-#36	2-#36
ⓧ Bar, length	6100	6800	7400	8100	8800	9400	10100	10700	11400	11900
ⓨ Bar	2-#29	2-#29	4-#29	4-#29	4-#36	4-#36	4-#36	4-#36	4-#36	4-#36
ⓨ Bar, length	2900	3700	4400	4900	5500	6300	6900	7600	8100	8500
ⓩ Bar	—	—	—	—	—	—	2-#36	2-#36	2-#36	2-#36
ⓩ Bar, length	—	—	—	—	—	—	3600	3700	4500	5200
Toe Pressure kPa										
Loading Case I	165	180	200	215	235	260	285	305	325	350
Loading Case II	190	210	235	260	290	320	350	380	410	450
Loading case III	200	225	255	280	310	330	350	370	390	415

For H=5500 thru 8500 pile footing, see 400 kN Pile Footing Section.

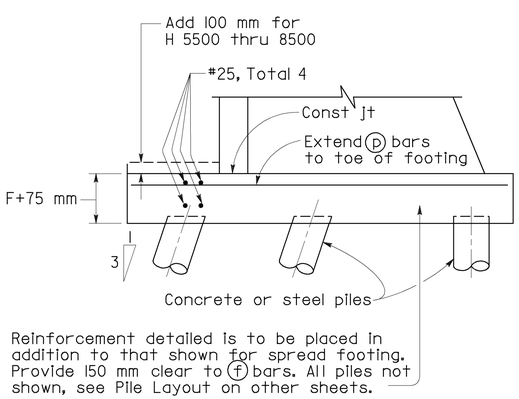

400 kN PILE FOOTING SECTION

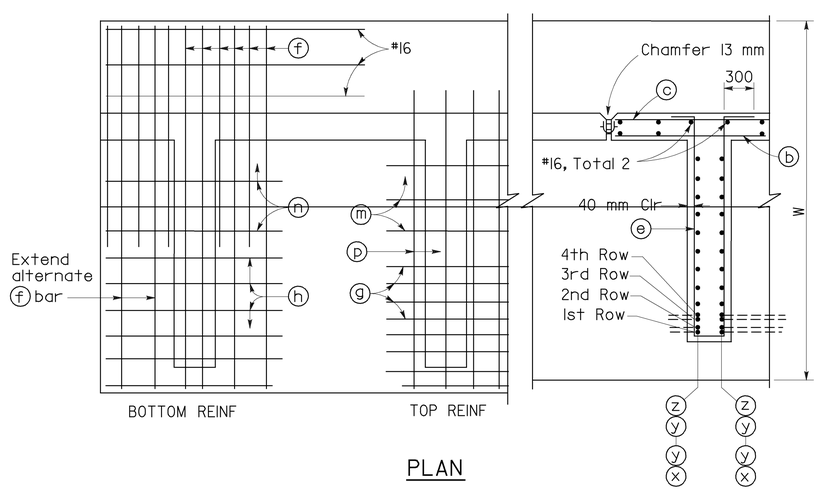

PLAN

NOTE

For design notes and drainage notes and other details, see B3-8
Length of ⓧ, ⓨ, and ⓩ bars indicates distance from top of footing to upper end of bar measured along bar.
No other splices are allowed except shown in the plans.

STATE OF CALIFORNIA
DEPARTMENT OF TRANSPORTATION

COUNTERFORT RETAINING WALL TYPE 3

NO SCALE

ALL DIMENSIONS ARE IN MILLIMETERS UNLESS OTHERWISE SHOWN

RSP B3-5 DATED OCTOBER 26, 2000 SUPERSEDES STANDARD PLAN B3-5 DATED JULY 1, 1999-PAGE 186 OF THE STANDARD PLANS BOOK DATED JULY 1999.

REVISED STANDARD PLAN RSP B3-5

1999 REVISED STD. PLAN RSP B3-5