DIST	COUNTY	ROUTE	KILOMETER POST TOTAL PROJECT	SHEET NO.	TOTAL SHEETS

Caltrans Metric

Overcomer Y. Hor
REGISTERED CIVIL ENGINEER

October 26, 2000
PLANS APPROVAL DATE

REGISTERED PROFESSIONAL ENGINEER
Overcomer Y. Hor
No. C45803
Exp. 12-31-02
CIVIL
STATE OF CALIFORNIA

The State of California or its officers or agents shall not be responsible for the accuracy or completeness of electronic copies of this plan sheet.

To accompany plans dated _____

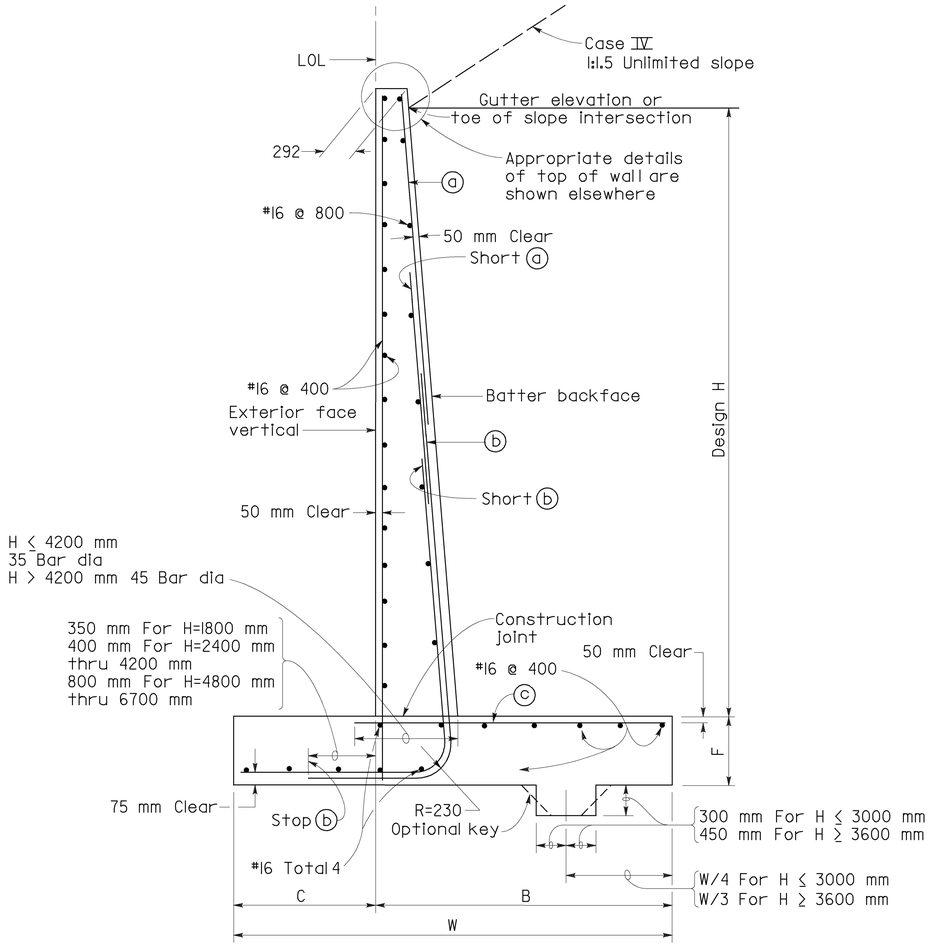

SPREAD FOOTING SECTION

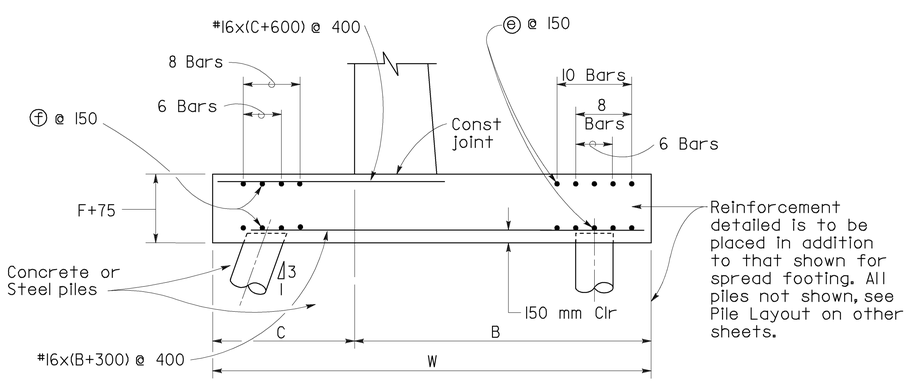

400 kN PILE FOOTING SECTION

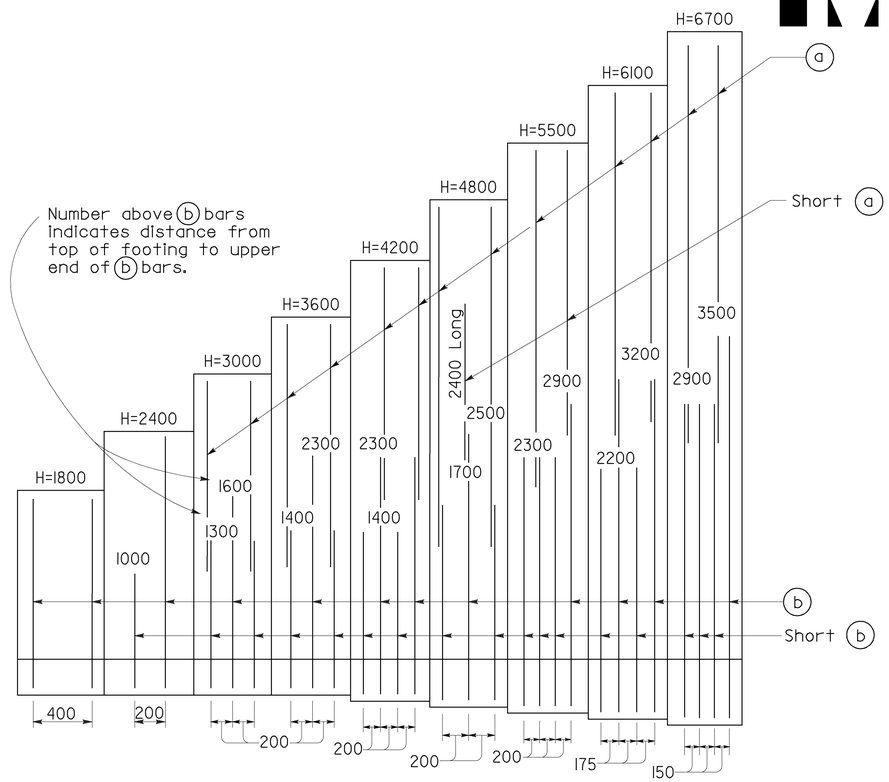

ELEVATION

TABLE OF REINFORCING STEEL, DIMENSIONS AND DATA

Design H	1800	2400	3000	3600	4200	4800	5500	6100	6700
W	1200	1600	2000	2500	3000	3500	4000	4600	5400
C	400	500	550	650	750	850	950	1150	1350
B	800	1100	1450	1850	2250	2650	3050	3450	4050
F	400	400	400	400	450	550	650	750	850
Batter	100:4	100:4	100:4	100:4	100:4	100:4	100:5	100:6	100:7
ⓐ bars			#16@400	#16@400	#19@400	#19@200	#25@400	#25@350	#25@300
ⓑ bars	#16@400	#16@200	#19@200	#25@200	#29@200	#36@200	#36@200	#36@175	#36@150
ⓒ bars	#16@400	#16@400	#19@400	#19@200	#19@200	#25@200	#25@200	#25@175	#25@150
Total ⓔ bars	6-#19	6-#19	8-#25	8-#25	8-#25	8-#25	10-#19	10-#19	10-#19
Total ⓕ bars			8-#19	8-#19	8-#19	8-#19	6-#19	6-#19	6-#19
Toe Press KPa	125	155	185	215	240	275	315	335	335

NOTES

1. For design notes, drainage notes and other details, See B3-8.
2. For wall stem joint details, see B0-3/3-3 and B0-3/3-4.
3. At ⓑ and Short ⓑ bars:
   H ≤ 1800 mm, no splices are allowed within 500 mm above the top of footing.
   H > 1800 mm, no splices are allowed within H/4 above the top of footing.

STATE OF CALIFORNIA
DEPARTMENT OF TRANSPORTATION

RETAINING WALL TYPE 2

NO SCALE

ALL DIMENSIONS ARE IN
MILLIMETERS UNLESS OTHERWISE SHOWN

RSP B3-4 DATED OCTOBER 26, 2000 SUPERSEDES STANDARD PLAN B3-4
DATED JULY 1, 1999-PAGE 185 OF THE STANDARD PLANS BOOK DATED JULY 1999.

REVISED STANDARD PLAN RSP B3-4

1999 REVISED STD. PLAN RSP B3-4