DIST	COUNTY	ROUTE	KILOMETER POST TOTAL PROJECT	SHEET NO.	TOTAL SHEETS

Caltrans Metric

REGISTERED CIVIL ENGINEER

September 7, 2005
PLANS APPROVAL DATE

REGISTERED PROFESSIONAL ENGINEER
Greg W. Edwards
No. C36386
Exp. 6-30-06
CIVIL
STATE OF CALIFORNIA

The State of California or its officers or agents shall not be responsible for the accuracy or completeness of electronic copies of this plan sheet.

To get to the Caltrans web site, go to: http://www.dot.ca.gov

To accompany plans dated _____

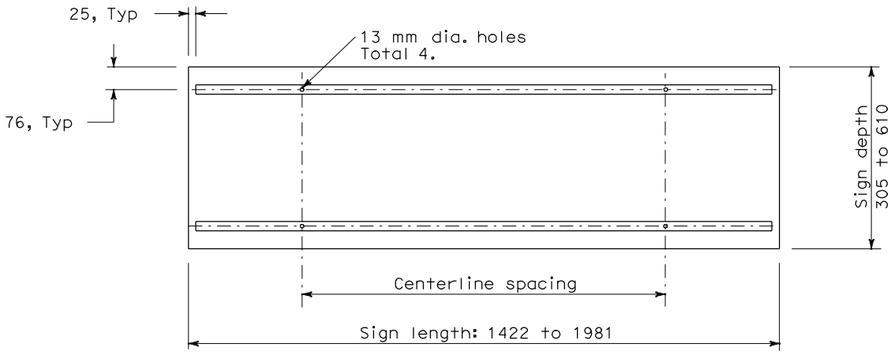

ROADSIDE SIGN No. 1

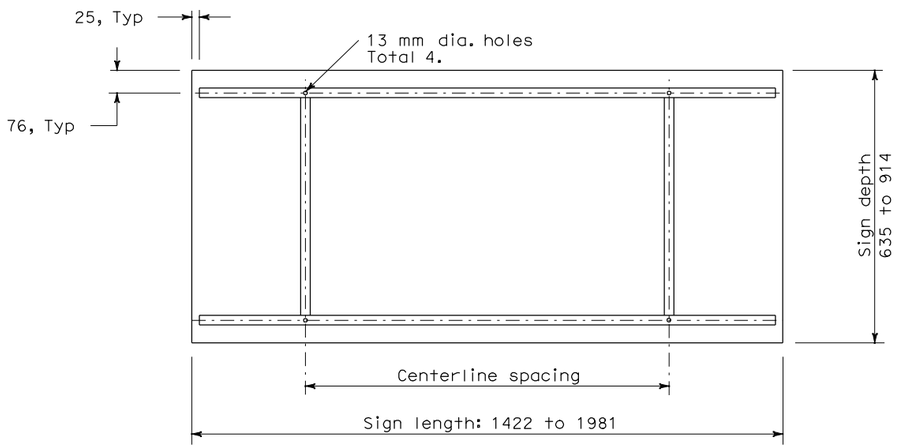

ROADSIDE SIGN No. 2

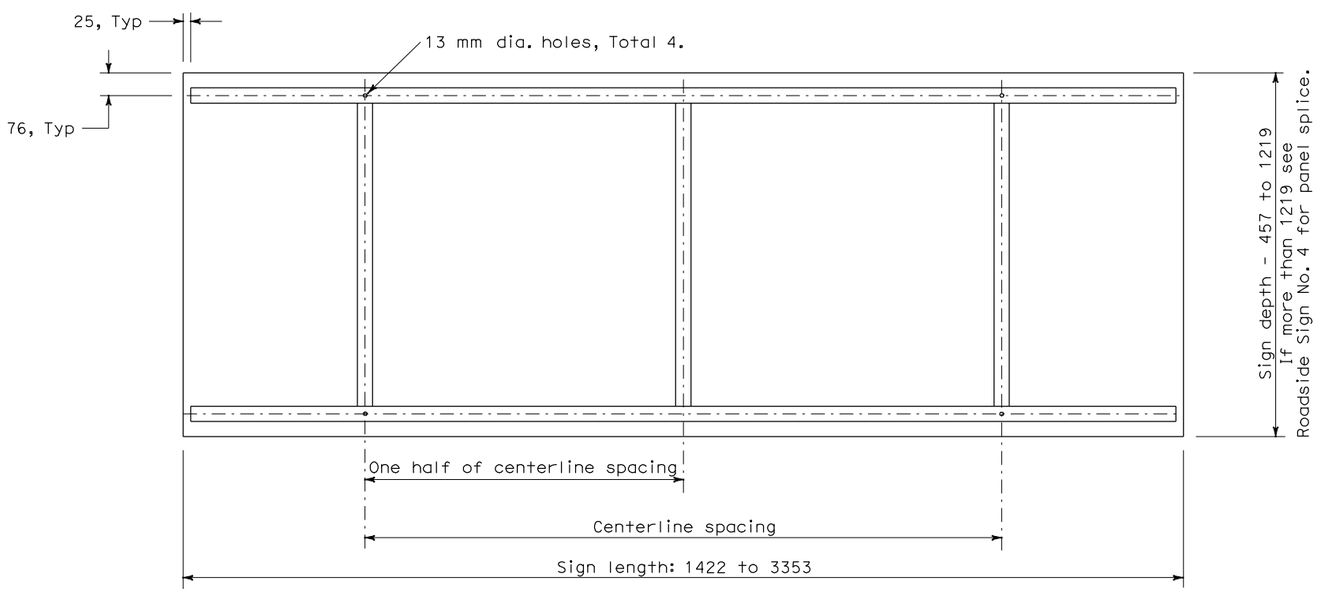

ROADSIDE SIGN No. 3

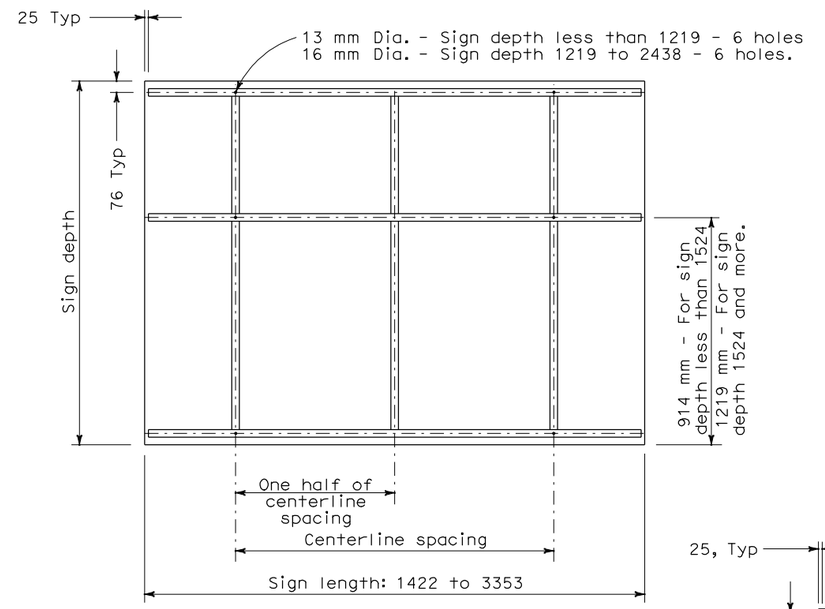

ROADSIDE SIGN No. 4

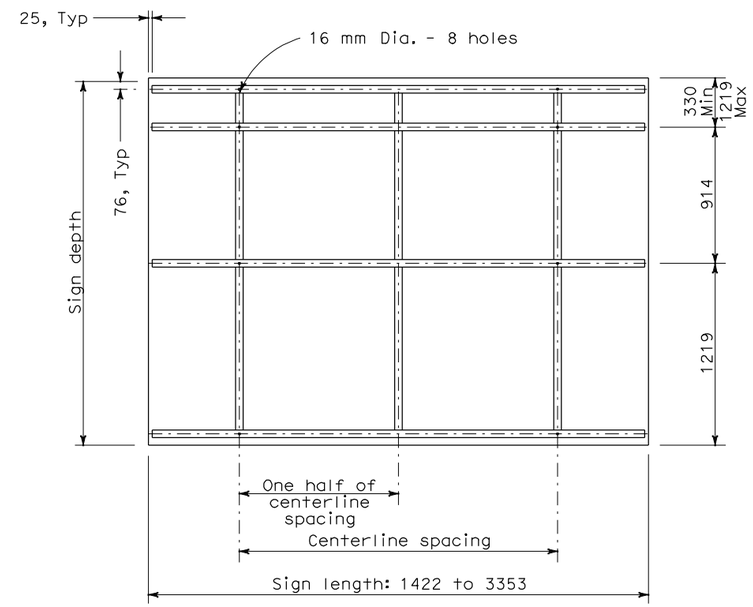

ROADSIDE SIGN No. 5

NOTES

1. See "FRAMING DETAILS FOR SINGLE SHEET ALUMINUM SIGNS RECTANGULAR SHAPE".
2. All members welded at joints as shown on New Standard Plan NSP S93.

STATE OF CALIFORNIA
DEPARTMENT OF TRANSPORTATION

ROADSIDE SINGLE SHEET ALUMINUM SIGNS RECTANGULAR SHAPE

NO SCALE

ALL DIMENSIONS ARE IN MILLIMETERS UNLESS OTHERWISE SHOWN

NSP S94 DATED SEPTEMBER 7, 2005
SUPPLEMENTS THE STANDARD PLANS BOOK DATED JULY 1999.

NEW STANDARD PLAN NSP S94

1999 NEW Std PLAN NSP S94

9-7-05