DIST	COUNTY	ROUTE	KILOMETER POST TOTAL PROJECT	SHEET NO.	TOTAL SHEETS

Caltrans Metric

REGISTERED CIVIL ENGINEER

July 1, 1999
PLANS APPROVAL DATE

REGISTERED PROFESSIONAL ENGINEER Jeffrey B. Woody No. C41260 Exp. 3-31-03 CIVIL STATE OF CALIFORNIA

The State of California or its officers or agents shall not be responsible for the accuracy or completeness of electronic copies of this plan sheet.

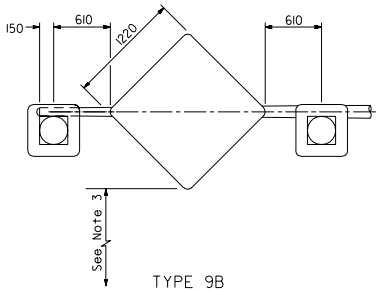

TYPE 9B

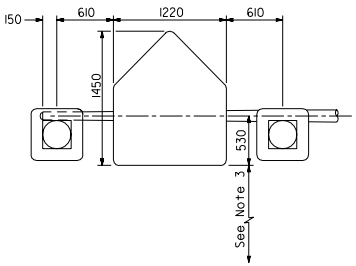

TYPE 9A

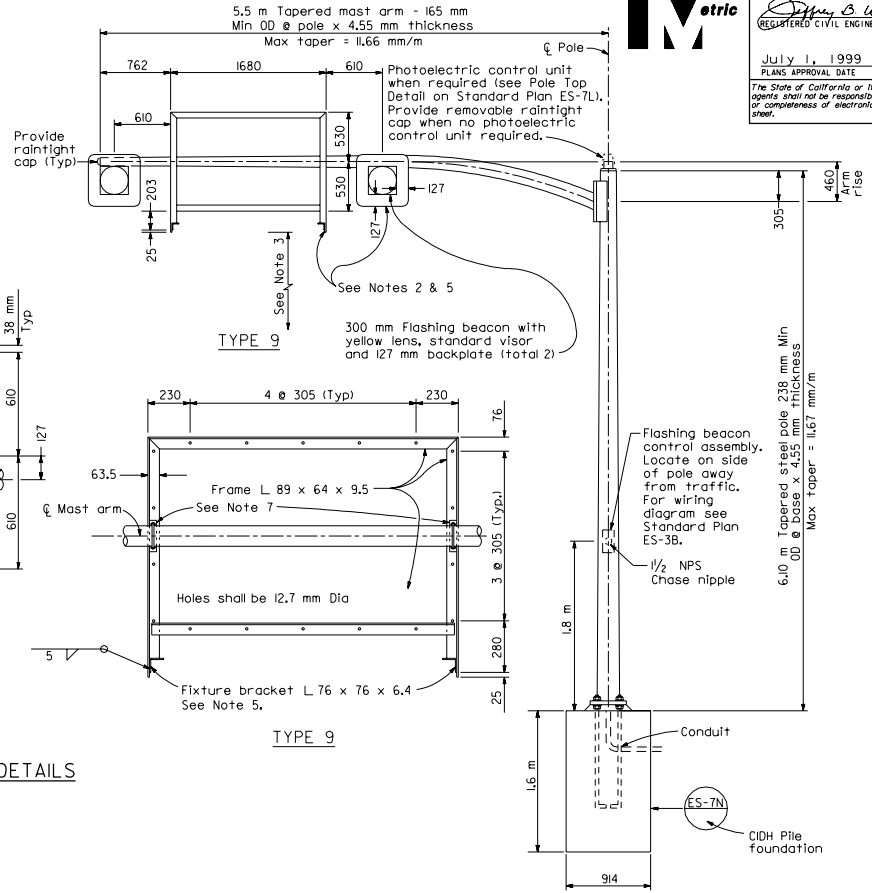

TYPE 9

ELEVATION

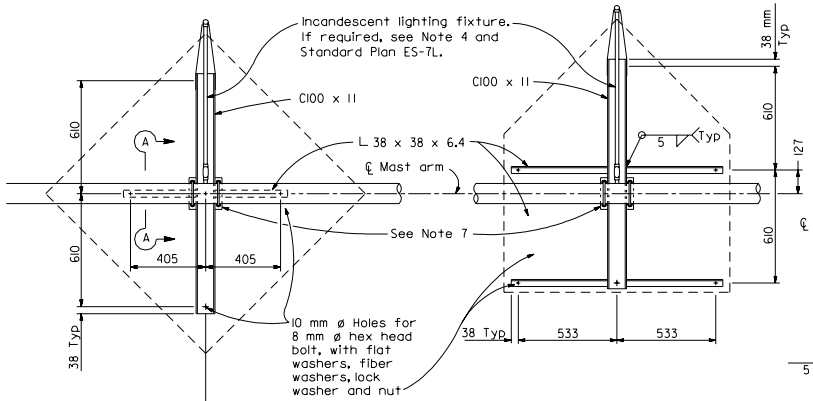

TYPE 9B TYPE 9A

FRAME DETAILS

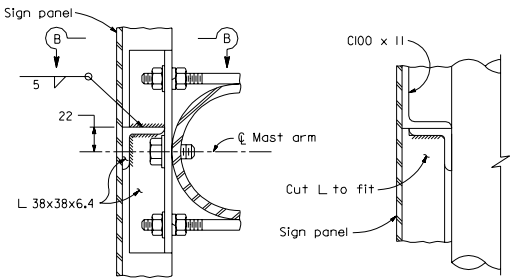

SECTION A-A SECTION B-B

TYPE 9B

NOTES

1. All splices between fluorescent fixture sockets shall be waterproof.
2. Install flashing beacons and sign frame. Flashing beacons to be MAT mounted on pipe tenon. (See Standard Plan ES-7M, Detail S)
3. Vertical clearance to be 5.2 m minimum between roadway and bottom of signal panel or lighting fixture bracket.
4. Special Provisions or plans will indicate when incandescent lighting fixture is required on Type 9A or 9B sign frames.
5. All Type 9 sign frames shall be provided with a 910 mm fluorescent fixture. For fluorescent lighting details see Standard Plan ES-15B.
6. Anchor bolts shall be ASTM A-307.
7. See Standard Plan ES-7L for sign frame mounting details.

STATE OF CALIFORNIA
DEPARTMENT OF TRANSPORTATION

SIGNAL, LIGHTING AND ELECTRICAL SYSTEMS CANTILEVER FLASHING BEACON TYPES 9, 9A AND 9B

NO SCALE

ALL DIMENSIONS ARE IN MILLIMETERS UNLESS OTHERWISE SHOWN

ES-7K

1999 STD. PLAN ES-7K