DIST	COUNTY	ROUTE	KILOMETER POST TOTAL PROJECT	SHEET NO.	TOTAL SHEETS

Caltrans Metric

REGISTERED CIVIL ENGINEER

July 1, 1999
PLANS APPROVAL DATE

REGISTERED PROFESSIONAL ENGINEER Glenn DeCou No. C34547 Exp. 9-30-99 CIVIL STATE OF CALIFORNIA

The State of California or its officers or agents shall not be responsible for the accuracy or completeness of electronic copies of this plan sheet.

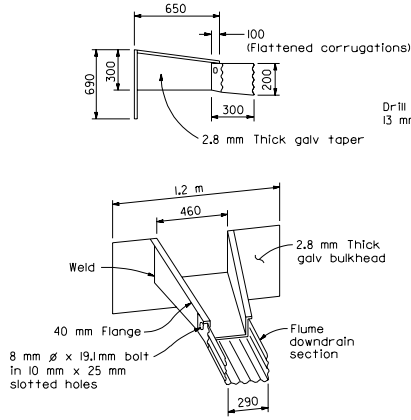

TAPERED INLET

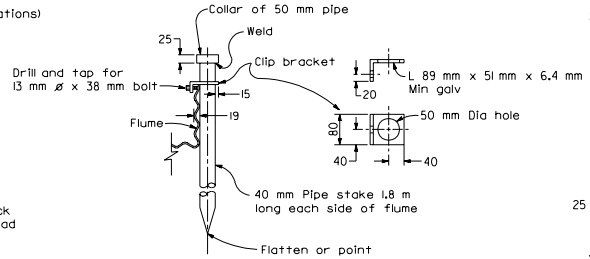

PIPE STAKE ANCHOR DETAIL

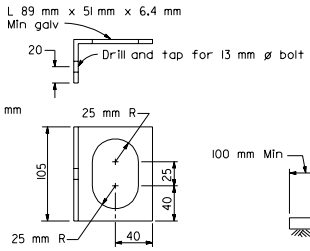

ALTERNATIVE CLIP BRACKET DETAIL

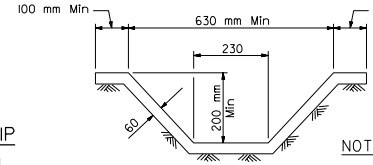

SECTION C-C
See Note 1

NOTE

1. Cross section of slope ditch may be semicircular, vee or trapezoidal.

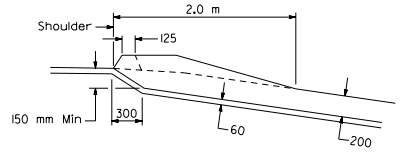

SECTION E-E

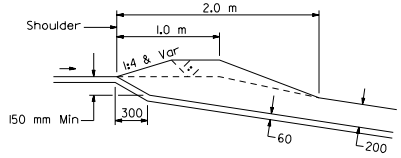

SECTION G-G

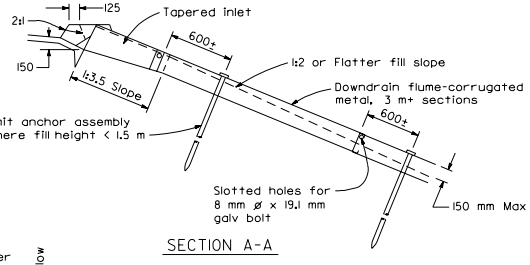

SECTION A-A

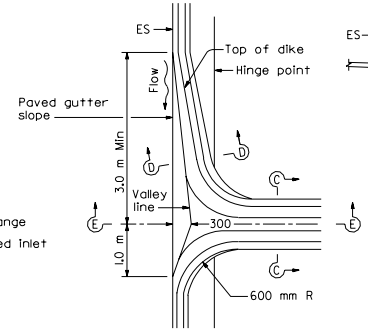

PLAN
TYPE A DIKE

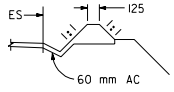

SECTION D-D

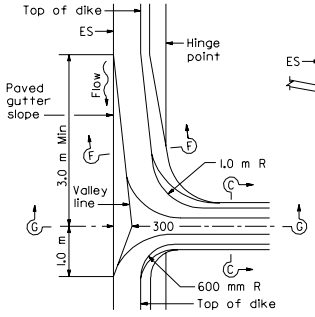

PLAN
MOUNTABLE DIKE

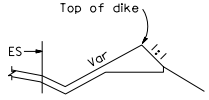

SECTION F-F

ASPHALT CONCRETE OVERSIDE DRAINS

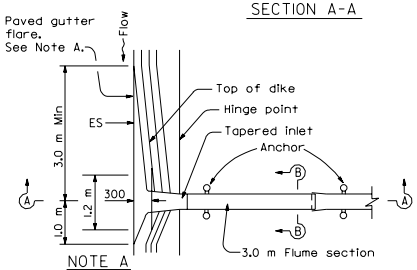

NOTE A
In sag location, use 3.0 m length of paved gutter flare on both sides of inlet.

PLAN

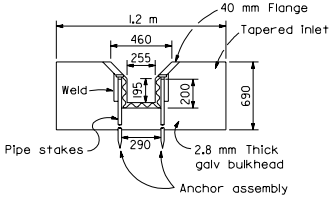

SECTION B-B

TAPERED INLET AND FLUME DOWNDRAIN

STATE OF CALIFORNIA
DEPARTMENT OF TRANSPORTATION

OVERSIDE DRAINS

NO SCALE

ALL DIMENSIONS ARE IN MILLIMETERS UNLESS OTHERWISE SHOWN

D87D

1999 STD. PLAN D87D