DIST	COUNTY	ROUTE	KILOMETER POST TOTAL PROJECT	SHEET NO.	TOTAL SHEETS

REGISTERED CIVIL ENGINEER

July 1, 2004
PLANS APPROVAL DATE

REGISTERED PROFESSIONAL ENGINEER
Tiliat Sattar
No. C42892
Exp. 03-31-2006
CIVIL
STATE OF CALIFORNIA

The State of California or its officers or agents shall not be responsible for the accuracy or completeness of electronic copies of this plan sheet.

To get to the Caltrans web site, go to: http://www.dot.ca.gov

Caltrans Metric

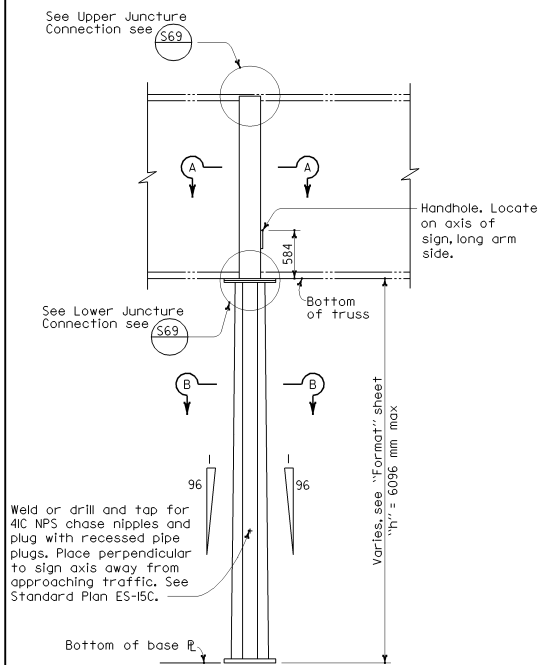

ELEVATION

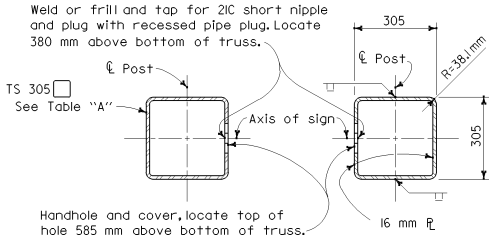

TYPE F-1 THRU F-3 TYPE F-4 AND F-5
SECTION A-A

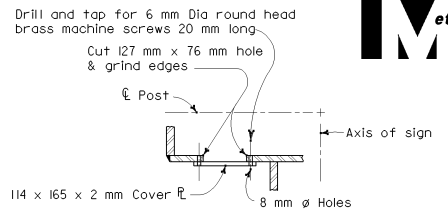

NOTE

Face handhole away from traveled way. On F-1 type post locate handhole on centerline post in Plate "A".

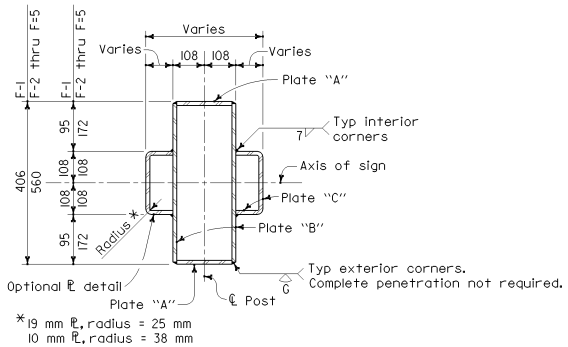

SECTION B-B

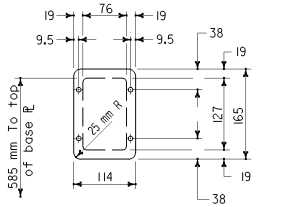

NOTE

For foundation details see S60

HANDHOLE AND COVER DETAIL

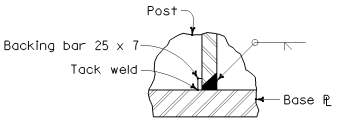

PLATES A, B AND C
POST TO BASE PLATE
WELDING DETAILS

TABLE "A"						
Post Type	Plate "A" (mm)	Plate "B" (mm)	Plate "C" (mm)	Base Plate (mm)	* Anchor Bolts No & Dia	Structural Tube
F-1	6.4x204	6.4	6.4	51x762x915	8-51mm ø	305x305x7.9
F-2	12.7x204	6.4	6.4	51x762x915	12-44 mm ø	305x305x9.5
F-3	38.1x204	6.4	6.4	51x762x915	12-51mm ø	305x305x12.7
F-4	38.1x197	9.5	9.5	64x762x915	12-57 mm ø	See Section A-A
F-5	38.1x178	19.1	19.1	70x762x915	12-57 mm ø	

* 51 mm ø Anchor bolts may be substituted for 44 mm ø bolts.

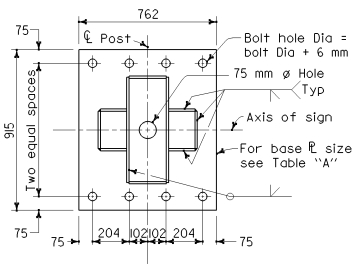

TYPE F-1

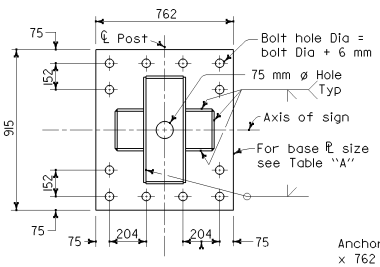

TYPE F-2 THRU F-5

BASE PLATE DETAILS

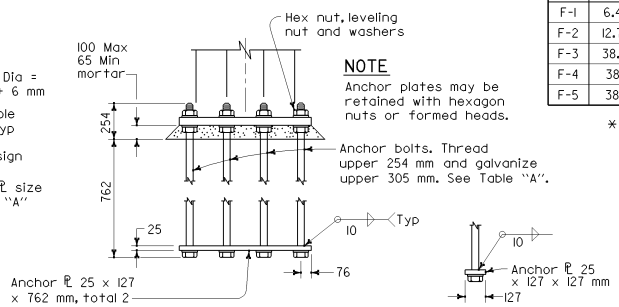

NOTE

Anchor plates may be retained with hexagon nuts or formed heads.

Anchor bolts. Thread upper 254 mm and galvanize upper 305 mm. See Table "A".

SINGLE SIDE BOLT

ANCHORAGE DETAILS

STATE OF CALIFORNIA
DEPARTMENT OF TRANSPORTATION

OVERHEAD SIGNS-BOX BEAM CLOSED TRUSS SINGLE POST BUTTERFLY POST DETAILS

NO SCALE

ALL DIMENSIONS ARE IN MILLIMETERS UNLESS OTHERWISE SHOWN

S73

2004 Std PLAN S73

08-02-04