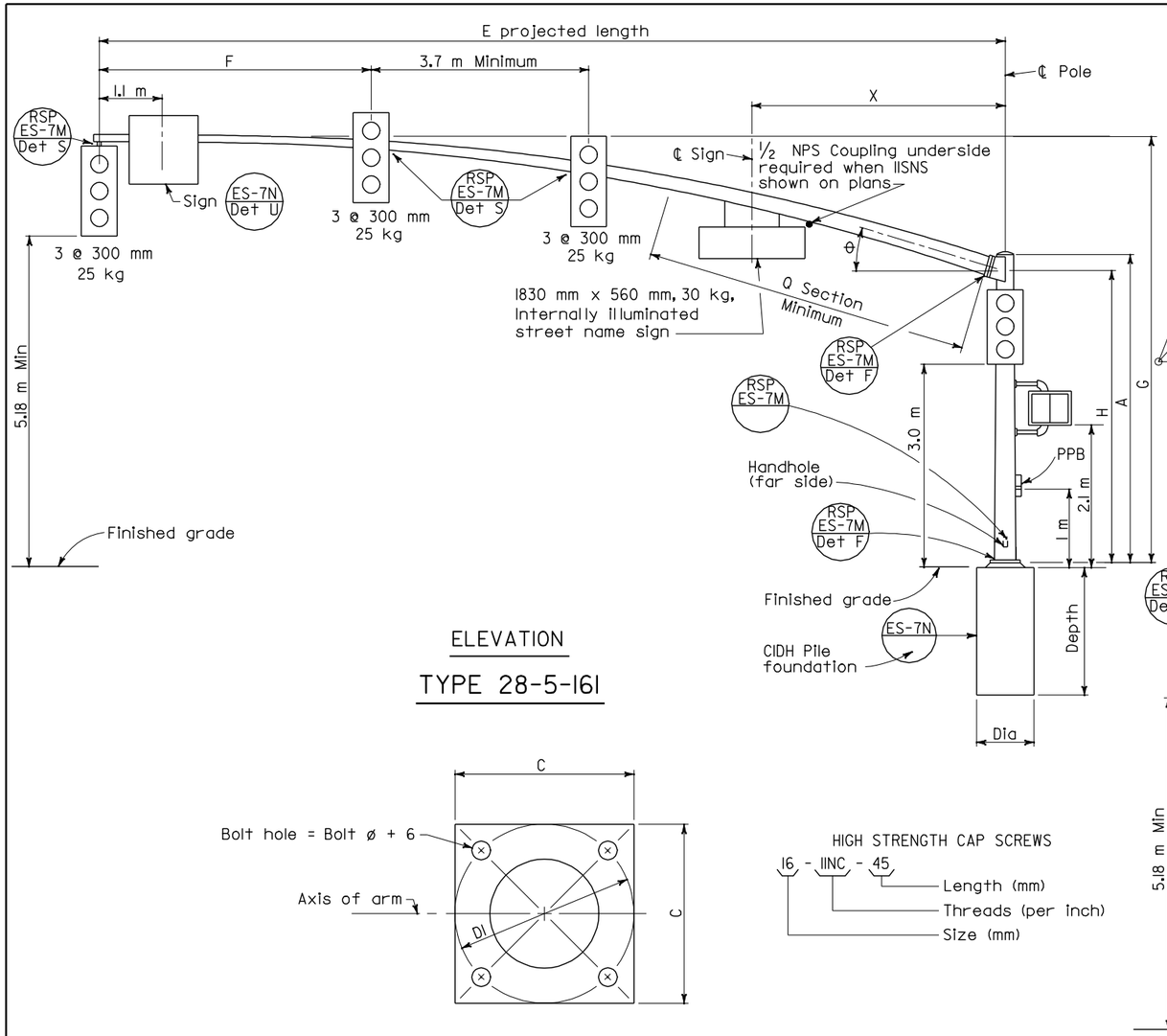

ELEVATION

TYPE 28-5-161

BASE PLATE

HIGH STRENGTH CAP SCREWS

16 - 11NC - 45

Length (mm)

Threads (per inch)

Size (mm)

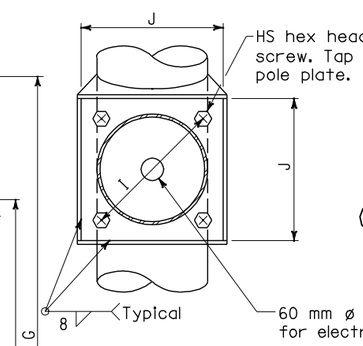

SECTION A-A

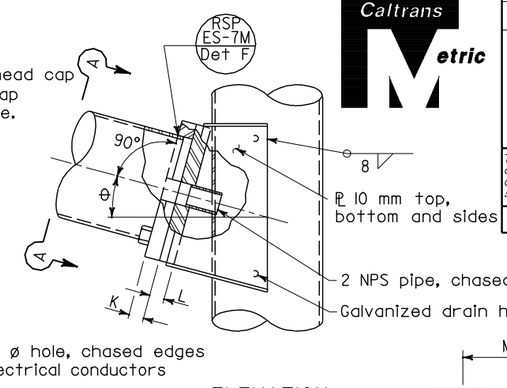

ELEVATION

SIGNAL ARM CONNECTION DETAILS

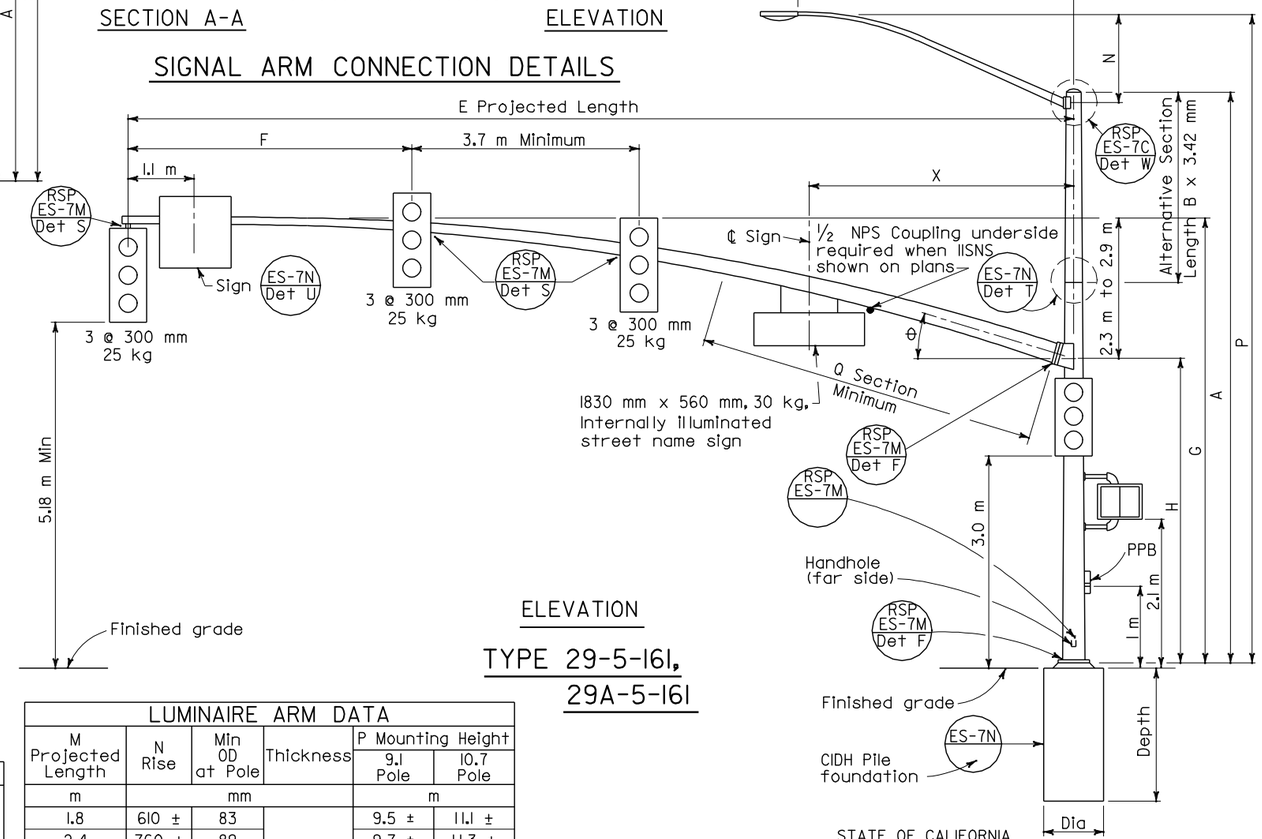

ELEVATION

TYPE 29-5-161, 29A-5-161

SIGNAL ARM DATA														
E Projected Length	F Min Spacing	G Mounting Height	H	Min OD At Pole	Thickness	I Bolt Circle	HS Cap Screws	J Plate Size	K Arm ℄ Thickness	L Pole ℄ Thickness	θ	Q SECTION Length	Q SECTION Thickness	X Max
m				mm								m	mm	m
15.2	4.6	7.2 to 7.8	4.9	291	4.6	406	38-6NC-83	406	45	45	15°	5.5	6.1	4.3
16.8				311								7.0		

LUMINAIRE ARM DATA					
M Projected Length	N Rise	Min OD at Pole	Thickness	P Mounting Height 9.1 Pole	P Mounting Height 10.7 Pole
m	mm			m	
1.8	610 ±	83	3.04	9.5 ±	11.1 ±
2.4	760 ±	89		9.7 ±	11.3 ±
3.1	990 ±	98		9.9 ±	11.5 ±
3.7	1290 ±			10.2 ±	11.8 ±
4.6	1450 ±	108		10.4 ±	12.0 ±

Pole Type	Load Case	Wind Velocity km/h	POLE DATA: A Height	Min OD Base	Min OD Top	Thickness	Alternative Section B Length	Alternative Section Bottom	Alternative Section Top	BASE PLATE DATA: C	DI Bolt Circle	D2	Thickness	Anchor Bolts Size	Luminaire Arm	Signal Arm	CIDH PILE FOUNDATION: Diameter	Depth	Reinforced
			m	mm			m	mm		mm					m		mm	m	
28-5-161	5	161	5.2	356	297	7.94	None			533	533		45	51ø x 1067 x 152	None	15.2 or 16.8	914	2.8	Yes
29-5-161			9.1		251		3.1	286	251						1.8 - [4.6]				
29A-5-161			10.7		233		4.6		233	584	584								

☐ Indicates arm length to be used unless otherwise noted on plans.

STATE OF CALIFORNIA
DEPARTMENT OF TRANSPORTATION

ELECTRICAL SYSTEMS (SIGNAL AND LIGHTING STANDARDS CASE 5 ARM LOADING WIND VELOCITY=161 km/h ARM LENGTHS 15.2 m TO 16.8 m)

NO SCALE

ALL DIMENSIONS ARE IN MILLIMETERS UNLESS OTHERWISE SHOWN

RSP ES-7G DATED DECEMBER 17, 2004 SUPERSEDES STANDARD PLAN ES-7G DATED JULY 1, 2004-PAGE 457 OF THE STANDARD PLANS BOOK DATED JULY 2004.

REVISED STANDARD PLAN RSP ES-7G

DIST	COUNTY	ROUTE	KILOMETER POST TOTAL PROJECT	SHEET NO.	TOTAL SHEETS

REGISTERED CIVIL ENGINEER

January 24, 2005
PLANS APPROVAL DATE

REGISTERED PROFESSIONAL ENGINEER Tillat Sattar No. C42892 Exp. 03-31-06 CIVIL STATE OF CALIFORNIA

The State of California or its officers or agents shall not be responsible for the accuracy or completeness of electronic copies of this plan sheet.

To get to the Caltrans web site, go to: http://www.dot.ca.gov

To accompany plans dated _____

2004 REVISED Std PLAN RSP ES-7G

1-24-05