DIST	COUNTY	ROUTE	KILOMETER POST TOTAL PROJECT	SHEET NO.	TOTAL SHEETS

Caltrans Metric

William K. Fornbach
REGISTERED CIVIL ENGINEER

July 1, 2004
PLANS APPROVAL DATE

REGISTERED PROFESSIONAL ENGINEER William K. Fornbach No. 49042 Exp. 09-30-04 CIVIL STATE OF CALIFORNIA

The State of California or its officers or agents shall not be responsible for the accuracy or completeness of electronic copies of this plan sheet.

To get to the Caltrans web site, go to: http://www.dot.ca.gov

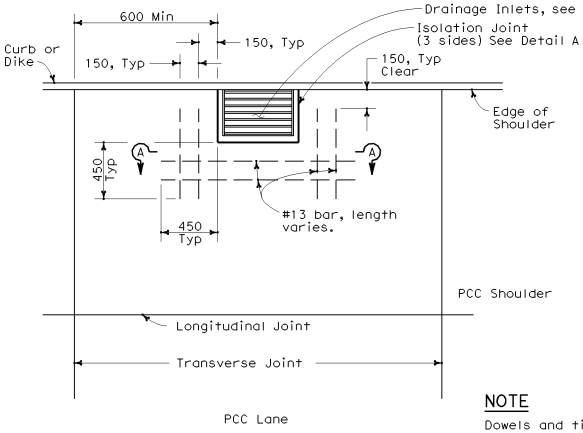

CASE 1

Transverse joint more than 600 mm clear of drainage inlet wall.

NOTE

Dowels and tie bars not shown, See Std. Plan P1.

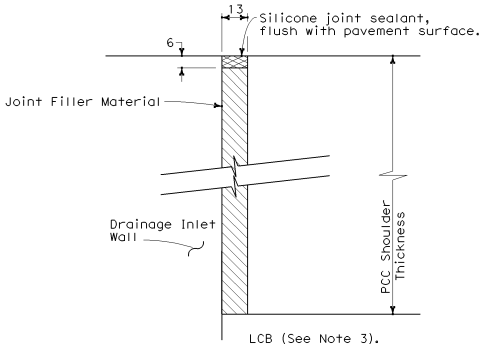

DETAIL "A"
ISOLATION JOINT AROUND DRAINAGE INLET

NOTES

1. Refer to Project Plans for location and types of drainage inlets.
2. Top of inlet shall be flush with shoulder surface.
3. Extend joint filler material to bottom of LCB. Where LCB is not used as base material, the joint filler material shall only extend to the bottom of the new PCC pavement.

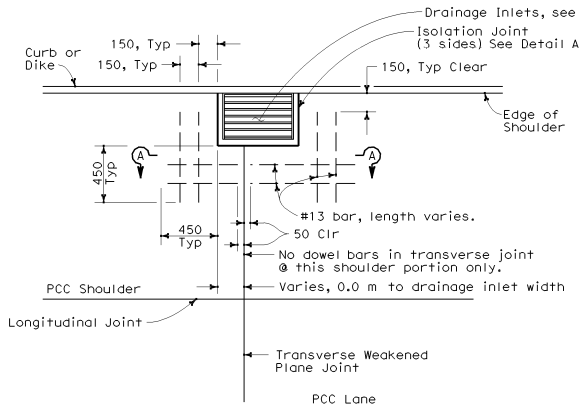

CASE 2

Transverse joint intersects drainage inlet, or matches drainage inlet wall.

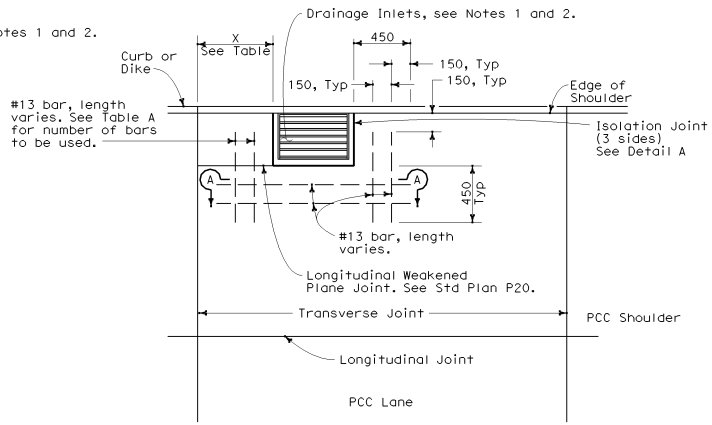

CASE 3

Transverse joint within 600 mm of drainage inlet wall, or matches drainage inlet wall.

TABLE A

DISTANCE X	BARS REQUIRED
600-450	2
450-225	1 @ X/2
225 or less	None

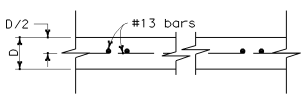

SECTION A-A

D = Pavement Thickness

STATE OF CALIFORNIA
DEPARTMENT OF TRANSPORTATION

CONCRETE PAVEMENT DRAINAGE INLET DETAILS No. 1

NO SCALE

ALL DIMENSIONS ARE IN MILLIMETERS UNLESS OTHERWISE SHOWN

P45