| DIST | COUNTY | ROUTE | KILOMETER POST TOTAL PROJECT | SHEET NO. | TOTAL SHEETS |
|---|---|---|---|---|---|
| | | | | | |

Caltrans Metric

LICENSED LANDSCAPE ARCHITECT

July 1, 2004
PLANS APPROVAL DATE

LICENSED LANDSCAPE ARCHITECT — STATE OF CALIFORNIA — 02-28-2005 Renewal Date — 04-01-2004 Date

*The State of California or its officers or agents shall not be responsible for the accuracy or completeness of electronic copies of this plan sheet.*

*To get to the Caltrans web site, go to: http://www.dot.ca.gov*

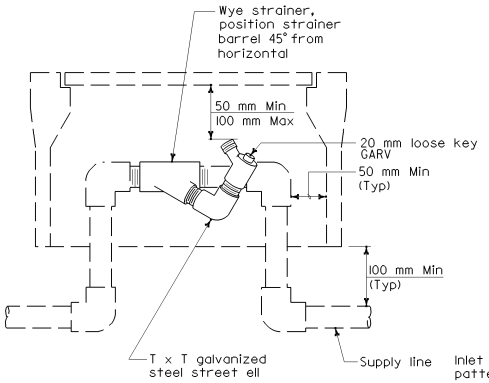


ELEVATION
## WYE STRAINER

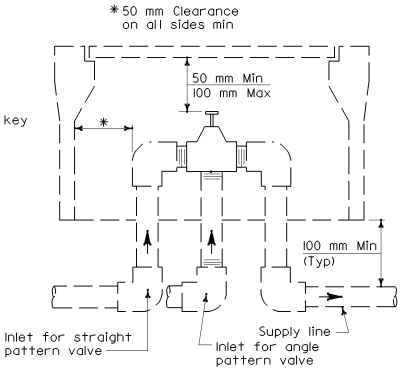


ELEVATION
## VALVE

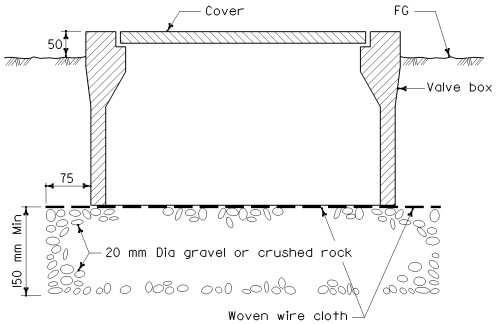


SECTION
## VALVE BOX

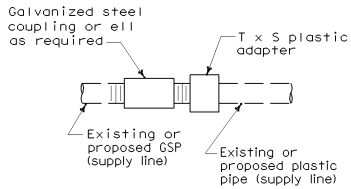


PLAN
## GALVANIZED AND PLASTIC PIPE CONNECTION

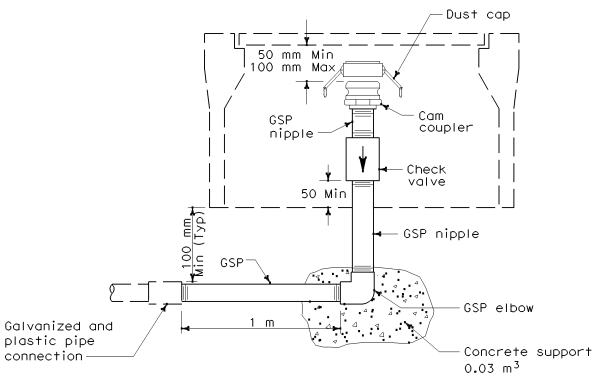


ELEVATION
## CAM COUPLER ASSEMBLY

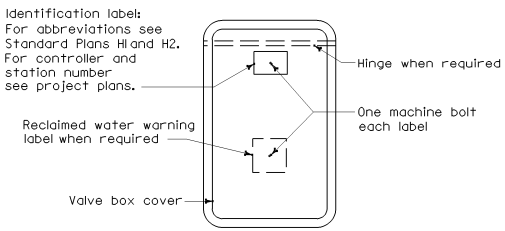


PLAN

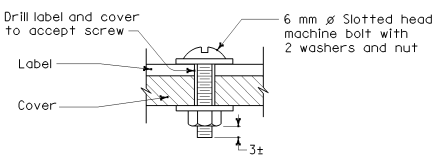


SECTION
## VALVE BOX IDENTIFICATION

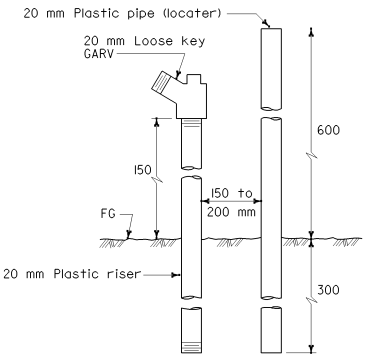


ELEVATION
## FLUSH VALVE

STATE OF CALIFORNIA
DEPARTMENT OF TRANSPORTATION

# PLANTING AND IRRIGATION DETAILS

NO SCALE

ALL DIMENSIONS ARE IN MILLIMETERS UNLESS OTHERWISE SHOWN

**H7**

2004 Std PLAN H7



04-08-04