DIST	COUNTY	ROUTE	KILOMETER POST TOTAL PROJECT	SHEET NO.	TOTAL SHEETS

Caltrans Metric

REGISTERED ELECTRICAL ENGINEER

July 1, 2004
PLANS APPROVAL DATE

REGISTERED PROFESSIONAL ENGINEER Martha V. Styer No. E13738 Exp. 6-30-07 ELECTRICAL STATE OF CALIFORNIA

The State of California or its officers or agents shall not be responsible for the accuracy or completeness of electronic copies of this plan sheet.

To get to the Caltrans web site, go to: http://www.dot.ca.gov

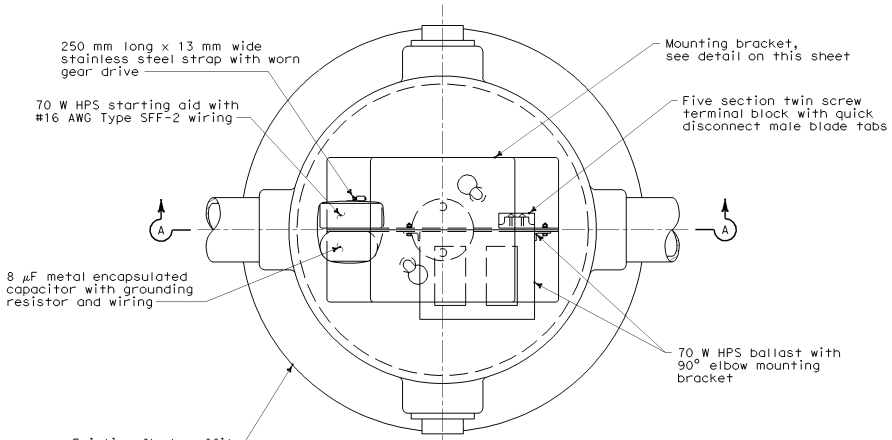

PLAN

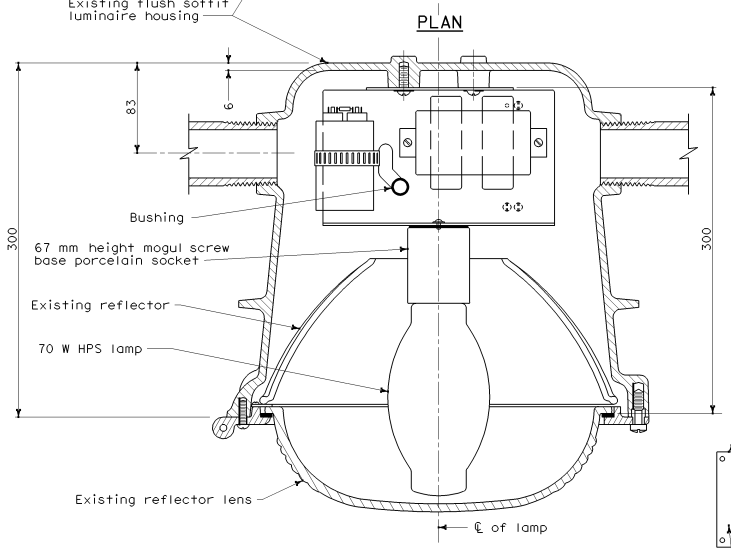

SECTION A-A

FLUSH SOFFIT LUMINAIRE ASSEMBLY

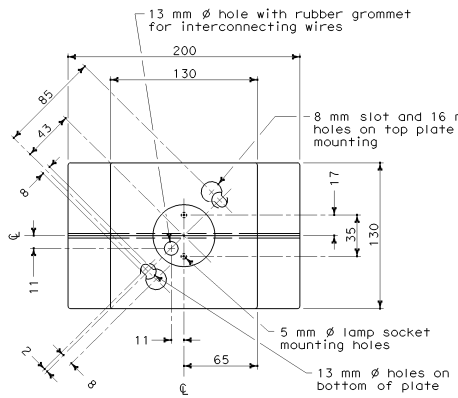

TOP VIEW

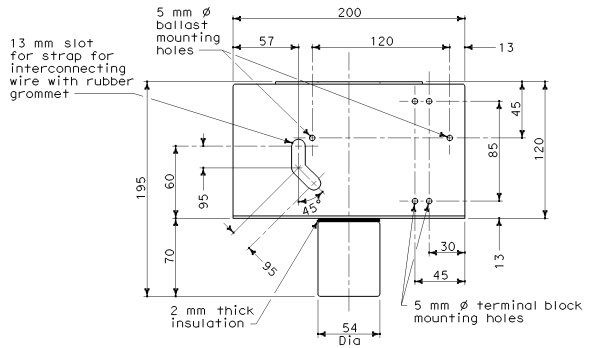

FRONT VIEW

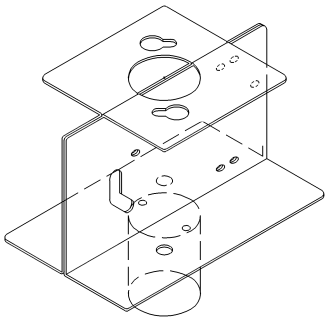

Preform two sheets 1.6 mm mild steel as shown, spotweld together in each corner with four spotwelds.

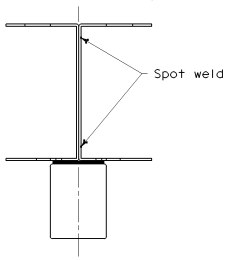

MOUNTING BRACKET DETAILS

SIDE VIEW

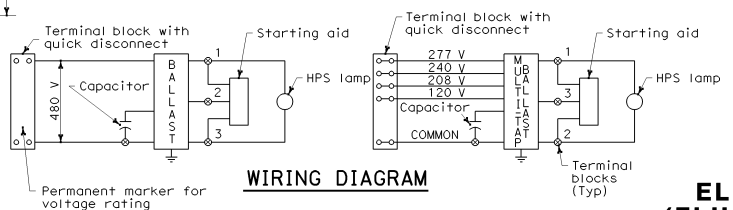

WIRING DIAGRAM

NOTES

1. Fixture wiring shall be Type SFF-2.
2. Use 4.2 mm ø machine screws, lockwashers and nuts for mounting ballast and terminal strips.
3. In-line fuse as required on Standard Plan ES-13B.

STATE OF CALIFORNIA
DEPARTMENT OF TRANSPORTATION

ELECTRICAL SYSTEMS (FLUSH SOFFIT LUMINAIRE MODIFICATION DETAILS STRUCTURE INSTALLATIONS)

NO SCALE

ALL DIMENSIONS ARE IN MILLIMETERS UNLESS OTHERWISE SHOWN

ES-9F

2004 Std PLAN ES-9F

05-24-04