| DIST | COUNTY | ROUTE | KILOMETER POST TOTAL PROJECT | SHEET NO. | TOTAL SHEETS |
|---|---|---|---|---|---|
| | | | | | |

Caltrans Metric

REGISTERED CIVIL ENGINEER

July 1, 2004
PLANS APPROVAL DATE

REGISTERED PROFESSIONAL ENGINEER — Tiliat Sattar — No. C42892 — Exp. 03-31-06 — CIVIL — STATE OF CALIFORNIA

*The State of California or its officers or agents shall not be responsible for the accuracy or completeness of electronic copies of this plan sheet.*

*To get to the Caltrans web site, go to: http://www.dot.ca.gov*

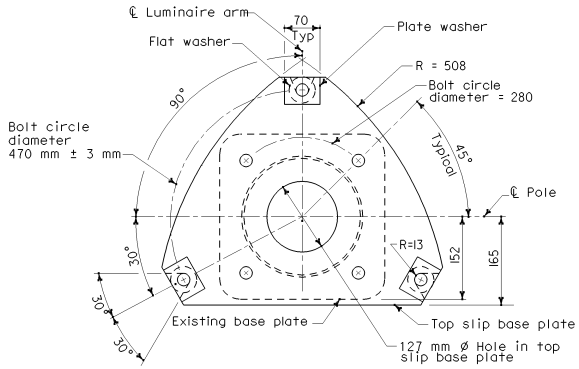


PLAN - TOP PLATE

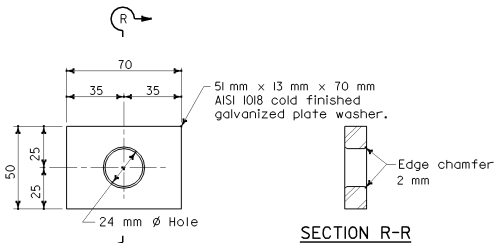


SECTION R-R

PLATE WASHER

## NOTES

1. Conduit riser (including bushing) shall protrude no more than 50 mm above top of foundation.
2. When existing anchor bolts are 22 mm ø, provide 2 hardened washers of 57 mm ø at each slot hole. Place on each side of anchor base plate.
3. Nuts on 22 mm ø HS clamping bolts shall be lubricated and torqued as per specifications.
4. Torque requirements for nuts attaching anchor base plate to existing anchor bolts are waived. Snug tighten.
5. For details not shown for Cast Option or Welded Option, see "Anchor Base Plate Details" and "Slip Base Plate Insert Details".

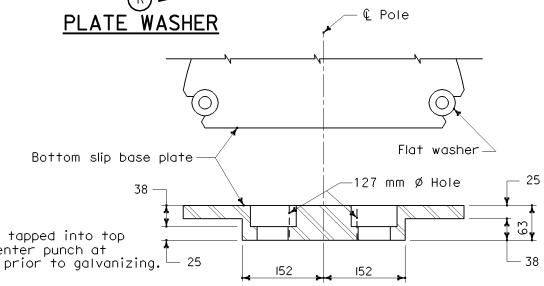


SECTION C-C
CAST OPTION
See Note 5

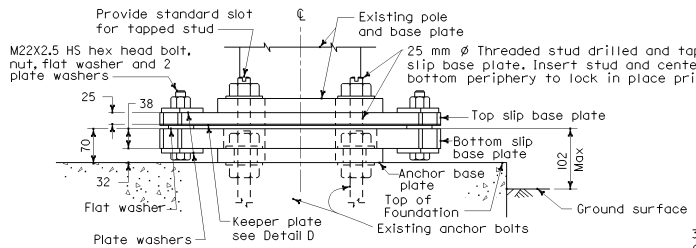


ELEVATION

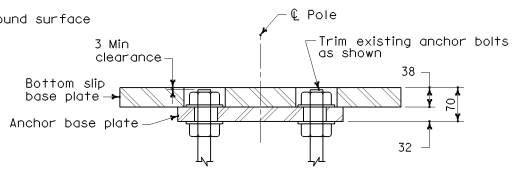


SECTION C-C
WELDED OPTION
See Note 5

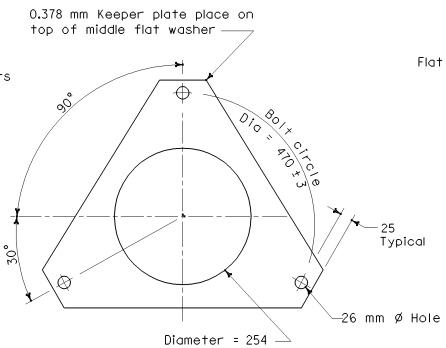


DETAIL D

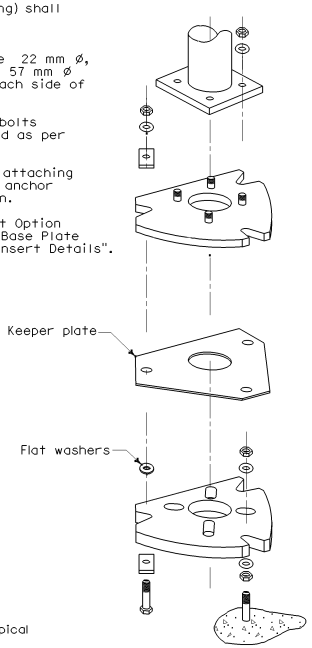


SLIP BASE INSERT DETAIL

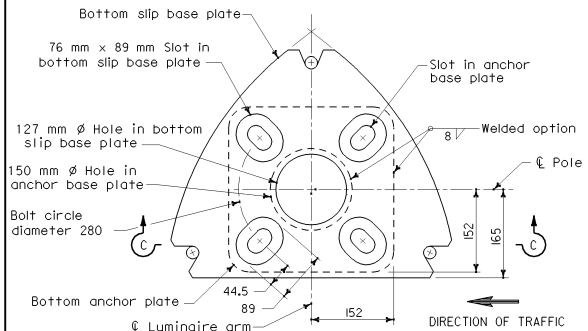


PLAN - BOTTOM PLATE
(For plate dimensions, see "Plan-Top Plate")

SLIP BASE PLATE INSERT DETAILS

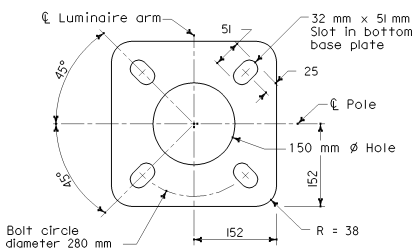


PLAN

ANCHOR BASE PLATE DETAILS

STATE OF CALIFORNIA
DEPARTMENT OF TRANSPORTATION

# ELECTRICAL SYSTEMS (LIGHTING STANDARDS TYPE 15 SLIP BASE INSERT)

NO SCALE

ALL DIMENSIONS ARE IN MILLIMETERS UNLESS OTHERWISE SHOWN

**ES-6C**

2004 Std PLAN ES-6C



07-15-04