DIST	COUNTY	ROUTE	KILOMETER POST TOTAL PROJECT	SHEET NO.	TOTAL SHEETS

Caltrans Metric

REGISTERED CIVIL ENGINEER

July 1, 2004
PLANS APPROVAL DATE

REGISTERED PROFESSIONAL ENGINEER Glenn DeCou No. C34547 Exp. 9-30-05 CIVIL STATE OF CALIFORNIA

The State of California or its officers or agents shall not be responsible for the accuracy or completeness of electronic copies of this plan sheet.

To get to the Caltrans web site, go to: http://www.dot.ca.gov

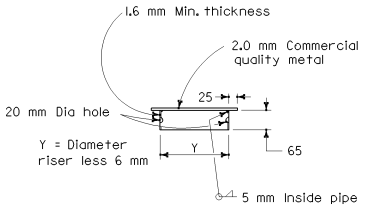

WELDED METAL COVER

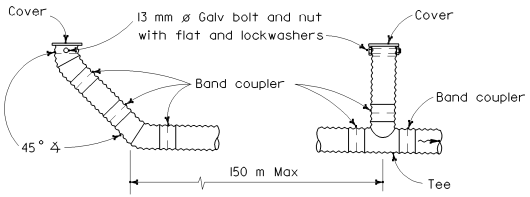

TERMINAL RISER VERTICAL RISER

Metal pipe risers and perforated metal pipe underdrain shown. Use type of pipe specified.

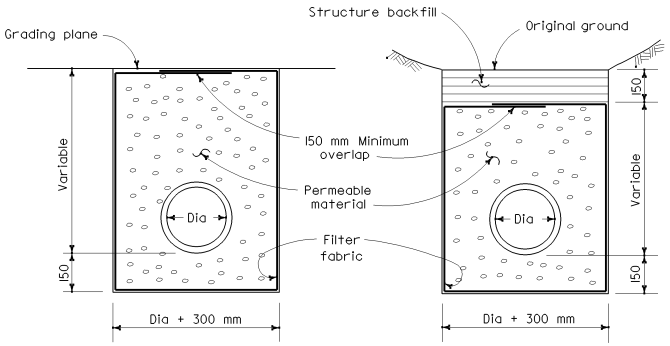

EXCAVATION AND BACKFILL

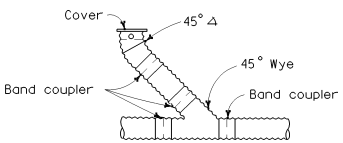

45° RISER

UNDERDRAIN RISERS

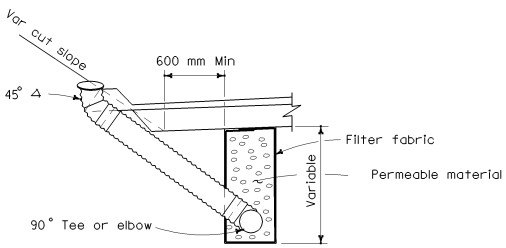

UNDERDRAIN LOCATION AND RISERS ANGLED TO CUT SLOPE

STATE OF CALIFORNIA
DEPARTMENT OF TRANSPORTATION

UNDERDRAINS

NO SCALE

ALL DIMENSIONS ARE IN MILLIMETERS UNLESS OTHERWISE SHOWN

D102

2004 Std PLAN D102

03-26-04