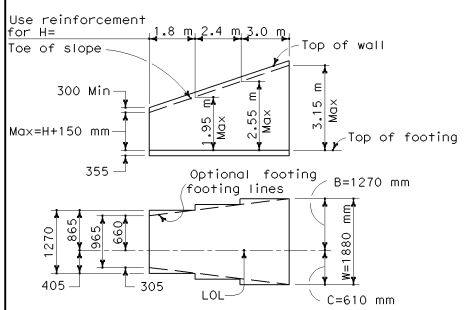

TYPICAL LAYOUT EXAMPLE

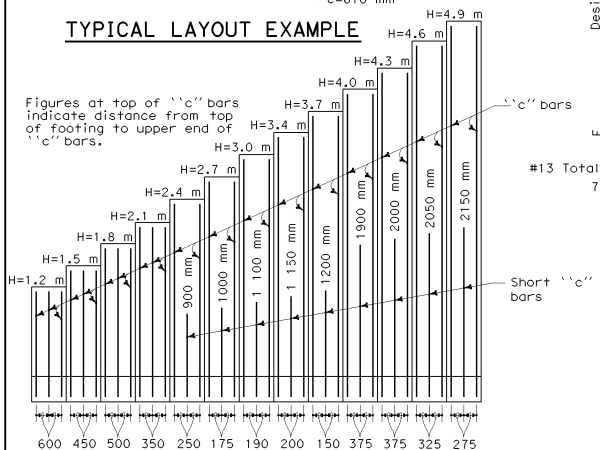

NOTE

Where 1 : 1.5 surcharge exceeds 1.5 m, use Type 2 retaining wall.

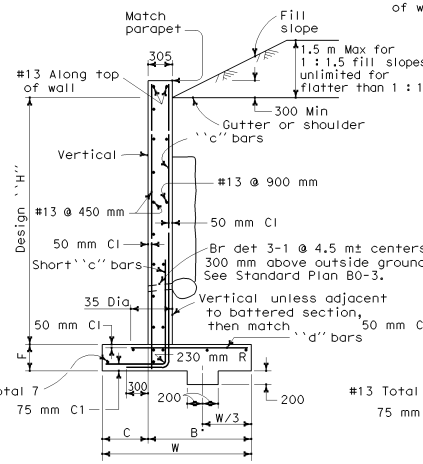

TYPICAL SECTION
H=1.2 m THRU 3.7 m

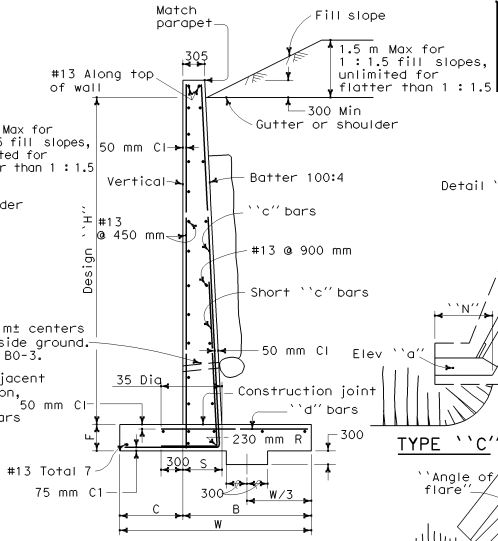

TYPICAL SECTION
H=4.0 m THRU 4.9 m

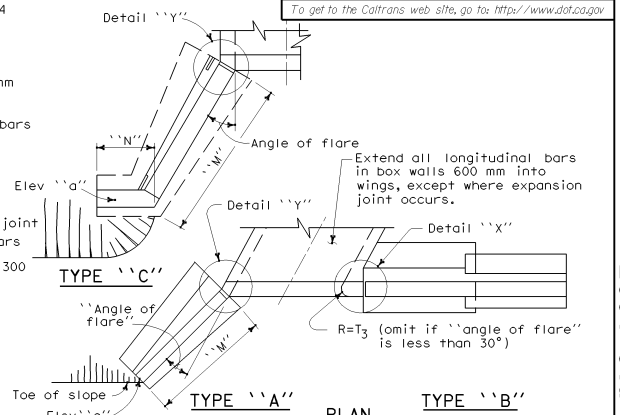

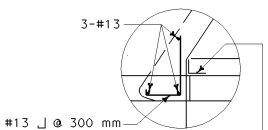

DETAIL ``X''

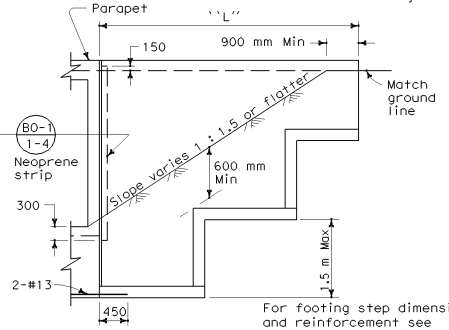

For footing step dimensions and reinforcement see ``Footing Step'' on Std Plan B3-8.

ELEVATION

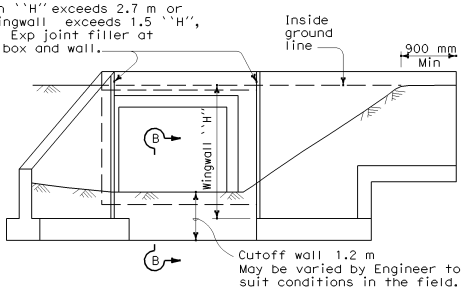

END ELEVATION

TYPE ``A'' TYPE ``B''

STRAIGHT WINGWALLS

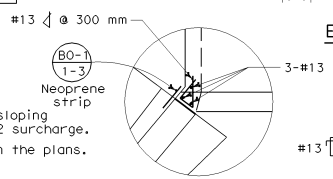

DETAIL ``Y''

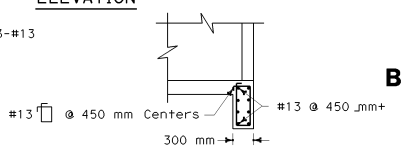

SECTION B-B

REINFORCED CONCRETE WINGWALLS

``H'' (m)	1.2	1.5	1.8	2.1	2.4	2.7	3.0	3.4	3.7	4.0	4.3	4.6	4.9
W (mm)	965	1120	1270	1420	1575	1730	1880	2030	2185	2335	2490	2640	2795
C (mm)	305	355	405	455	510	560	610	660	710	760	815	865	915
B (mm)	660	765	865	965	1065	1170	1270	1370	1475	1575	1675	1775	1880
F (mm)	355												
Batter	None									4:100			
S (mm)	305	305	305	305	305	305	305	305	305	465	475	490	500
``c'' Bars	#13@600	#13@450	#16@500	#16@350	#16@250	#16@175	#19@190	#22@200	#22@150	#29@375	#32@375	#32@325	#32@275
``d'' Bars	#13@600	#13@450	#16@500	#16@350	#16@250	#19@350	#22@380	#25@400	#22@300	#25@375	#29@375	#29@325	#29@275
Conc m^3/m	0.80	0.95	1.10	1.23	1.38	1.53	1.68	1.83	1.98	2.56	2.76	2.96	3.16
Reinf kg/m	19	24	28	37	45	55	73	92	113	109	134	155	186

Quantities do not include that portion above the design ``H'' limit.

NOTES

Unit Stresses: f_s =165 MPa, f_c =9 MPa, n=10

Maximum Toe Pressure = 140 kPa

Elevations, length and angle of flare of wings may be varied by the Engineer to suit conditions encountered in the field. Walls designed for 600 mm liveload surcharge, 1 : 1.5 sloping surcharge not to exceed 1.5 m in elevation plus 600 mm liveload surcharge, or unlimited 1:2 surcharge.

Dimensions ``H'',``L'',``M'',``N'', Elevation ``a'' and ``Angle of flare'' (as apply) are shown on the plans.

Wall height may be exceeded by 150 mm before going to next greater ``H''.

Eliminate cutoff wall if adjacent channel is paved and skew is 20 maximum.

For wall offset values, see Standard Plan B3-8.

DIST	COUNTY	ROUTE	KILOMETER POST TOTAL PROJECT	SHEET NO.	TOTAL SHEETS

Caltrans Metric

REGISTERED CIVIL ENGINEER

July 1, 2004
PLANS APPROVAL DATE

REGISTERED PROFESSIONAL ENGINEER Dallas Forester No. C37765 Exp. 12-31-04 CIVIL STATE OF CALIFORNIA

The State of California or its officers or agents shall not be responsible for the accuracy or completeness of electronic copies of this plan sheet.

To get to the Caltrans web site, go to: http://www.dot.ca.gov

STATE OF CALIFORNIA
DEPARTMENT OF TRANSPORTATION

BOX CULVERT WINGWALLS TYPES A, B AND C

NO SCALE

ALL DIMENSIONS ARE IN MILLIMETERS UNLESS OTHERWISE SHOWN

D84

04-01-04