DIST	COUNTY	ROUTE	KILOMETER POST TOTAL PROJECT	SHEET NO.	TOTAL SHEETS

REGISTERED CIVIL ENGINEER

July 1, 2004
PLANS APPROVAL DATE

REGISTERED PROFESSIONAL ENGINEER Douglas J. Dunnuck No. C47240 Exp. 12-31-05 CIVIL STATE OF CALIFORNIA

The State of California or its officers or agents shall not be responsible for the accuracy or completeness of electronic copies of this plan sheet.

To get to the Caltrans web site, go to: http://www.dot.ca.gov

Caltrans Metric

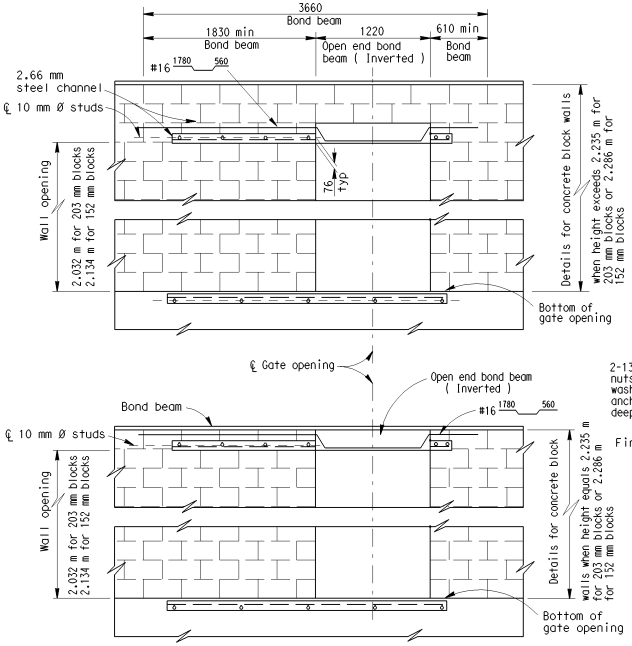

PART ELEVATION (BACK)

For details not shown, see above.

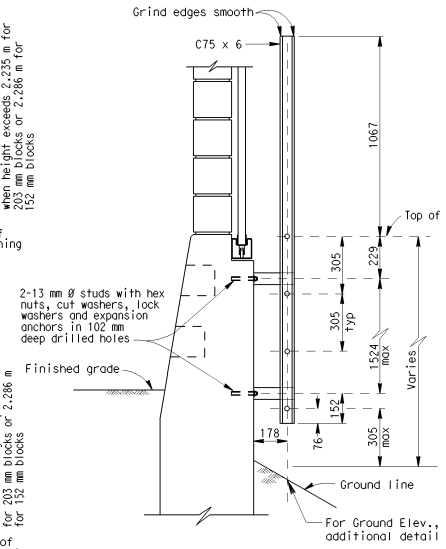

SECTION E-E

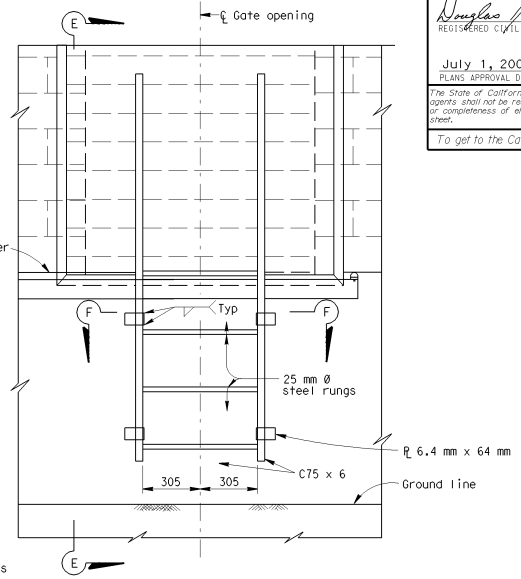

ELEVATION (BACK)

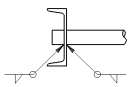

DETAIL A

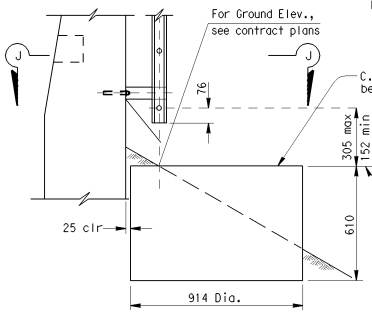

Note: C.S.P. landing required when slope of ground behind barrier is steeper than 1:8. See additional detail sheets for location where required

C.S.P. LANDING DETAILS

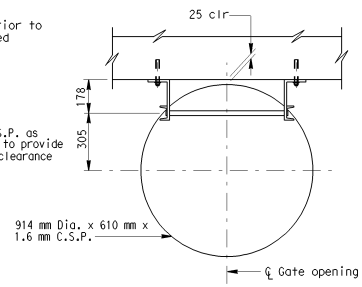

SECTION J-J

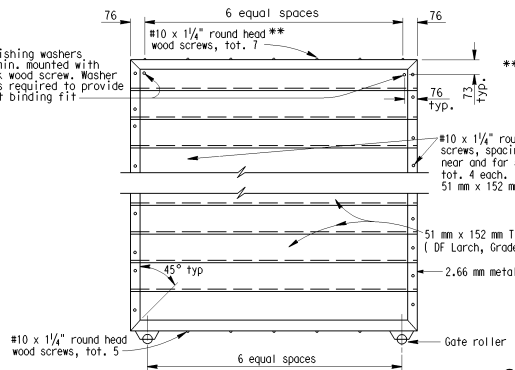

** Wood screws are in U.S. Customary Units.

ELEVATION - METAL FRAME

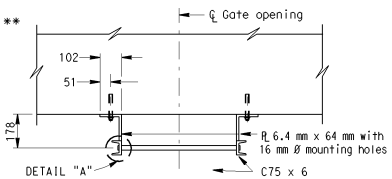

SECTION F-F

STATE OF CALIFORNIA
DEPARTMENT OF TRANSPORTATION

SOUNDWALL MASONRY BLOCK ON BARRIER 1.524 m ACCESS GATE DETAILS (2)

NO SCALE

ALL DIMENSIONS ARE IN MILLIMETERS UNLESS OTHERWISE SHOWN

B15-13

2004 Std PLAN B15-13

06-18-04