DIST	COUNTY	ROUTE	KILOMETER POST TOTAL PROJECT	SHEET NO.	TOTAL SHEETS

Caltrans Metric

REGISTERED MECHANICAL ENGINEER

July 1, 2004
PLANS APPROVAL DATE

REGISTERED PROFESSIONAL ENGINEER
Hao T. Phan
No. M20269
Exp. 9-30-04
MECHANICAL
STATE OF CALIFORNIA

The State of California or its officers or agents shall not be responsible for the accuracy or completeness of electronic copies of this plan sheet.

To get to the Caltrans web site, go to: http://www.dot.ca.gov

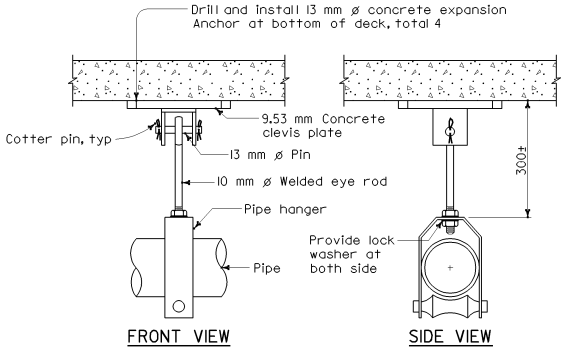

FOR EXISTING BRIDGE

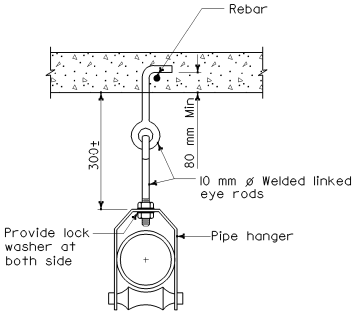

FOR NEW BRIDGE

PIPE HANGER

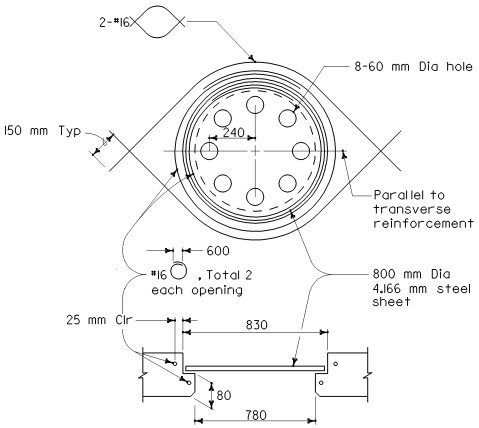

Locate where called for on bridge plans. Adjust reinforcement to clear opening. Plate must be installed before top deck is placed.

SOFFIT ACCESS OPENING

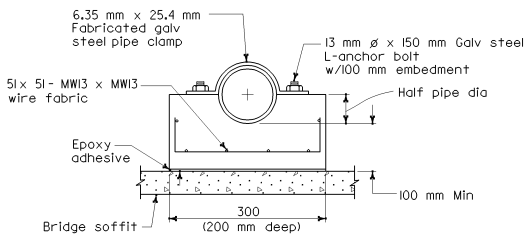

CONCRETE PIPE SUPPORT

STATE OF CALIFORNIA
DEPARTMENT OF TRANSPORTATION

WATER SUPPLY LINE (DETAILS) (PIPE SIZES LESS THAN NPS 4)

NO SCALE

ALL DIMENSIONS ARE IN MILLIMETERS UNLESS OTHERWISE SHOWN

B14-5

2004 Std PLAN B14-5

03-24-04