DIST	COUNTY	ROUTE	KILOMETER POST TOTAL PROJECT	SHEET NO.	TOTAL SHEETS

REGISTERED CIVIL ENGINEER

July 1, 2004
PLANS APPROVAL DATE

REGISTERED PROFESSIONAL ENGINEER NAHED ABDIN No. C48719 Exp. 9-30-04 CIVIL STATE OF CALIFORNIA

The State of California or its officers or agents shall not be responsible for the accuracy or completeness of electronic copies of this plan sheet.

To get to the Caltrans web site, go to: http://www.dot.ca.gov

Caltrans Metric

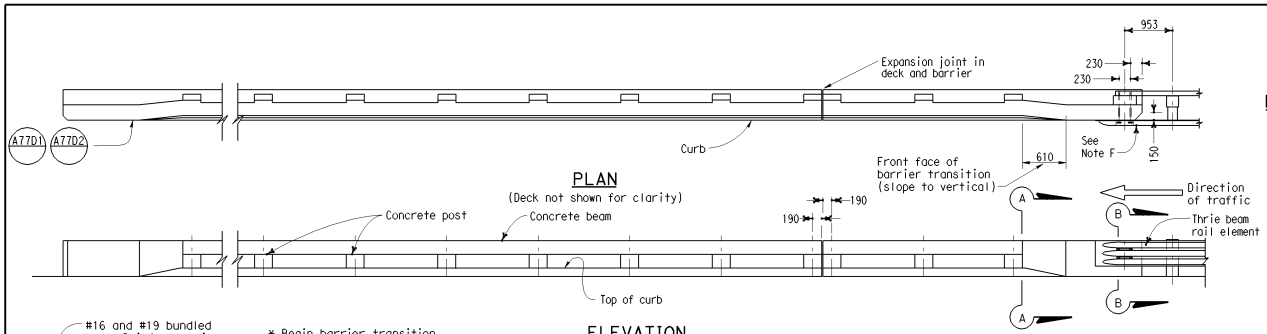

PLAN
(Deck not shown for clarity)

ELEVATION

NOTES

A. Walls are to be backfilled before the barrier is placed.

B. Longitudinal reinforcing steel to stop at all expansion joints.

C. The front face dimensions are to be constant above the finish roadway profile, but the overall height will vary with certain thicknesses of surfacing and roadway slopes.

D. Expansion joint to match deck joint.

E. No lap splicing allowed on the longitudinal rail reinforcing. Splicing shall be staggered.

F. For typical metal railing connection details not shown, see Standard Plans A77J1 and A77J2.

G. Chain link railing is not allowed on Type 80 Barriers.

H. Post to be spaced equally, typically 2000 mm spacing. Post spacing may be reduced where location of hinges or expansion joints or the length of wingwalls will not accommodate the 2000 mm spacing. Maximum see-through availability is to be strived for, where 2000 mm post spacing can not be achieved.

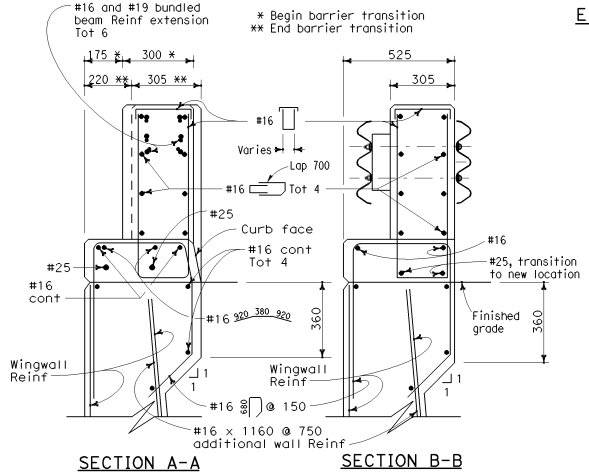

SECTION A-A

SECTION B-B

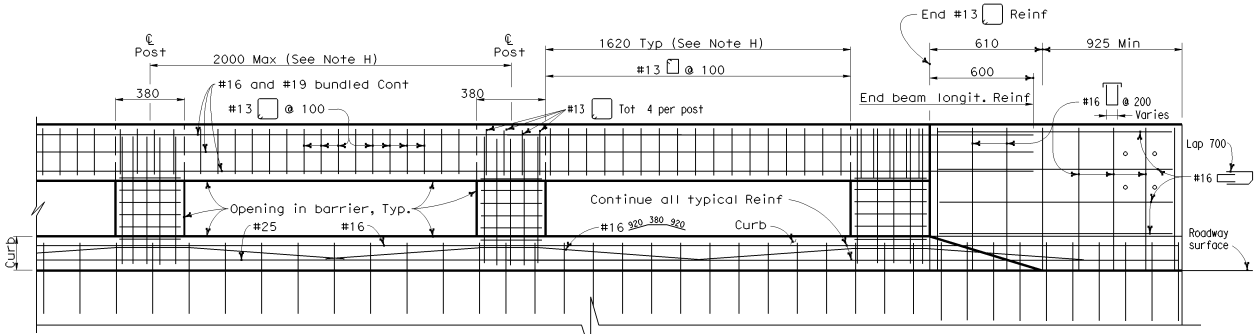

LONGITUDINAL SECTION
(Deck or wingwall reinforcing not shown)

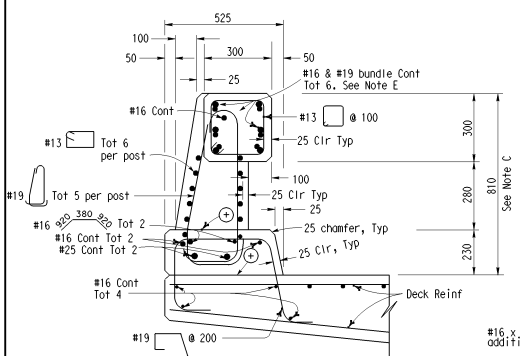

TYPE 80

⊕ Optinal construction joint

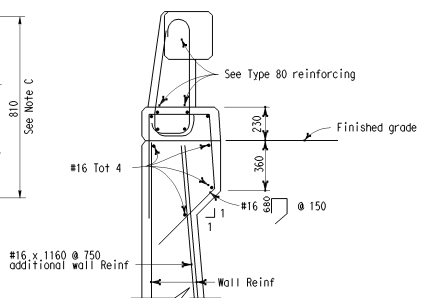

TYPE 80A

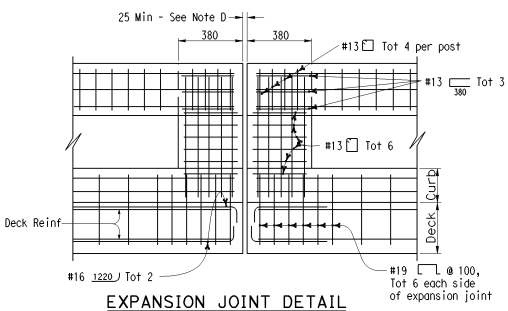

EXPANSION JOINT DETAIL

STATE OF CALIFORNIA
DEPARTMENT OF TRANSPORTATION

CONCRETE BARRIER TYPE 80 (SHEET 1 OF 2)

NO SCALE

ALL DIMENSIONS ARE IN MILLIMETERS UNLESS OTHERWISE SHOWN

B11-60

2004 Std PLAN B11-60

07-08-04