DIST	COUNTY	ROUTE	KILOMETER POST TOTAL PROJECT	SHEET NO.	TOTAL SHEETS

REGISTERED CIVIL ENGINEER

July 1, 2004
PLANS APPROVAL DATE

REGISTERED PROFESSIONAL ENGINEER NAHED ABDIN No. C48719 Exp. 9-30-04 CIVIL STATE OF CALIFORNIA

The State of California or its officers or agents shall not be responsible for the accuracy or completeness of electronic copies of this plan sheet.

To get to the Caltrans web site, go to: http://www.dot.ca.gov

Caltrans Metric

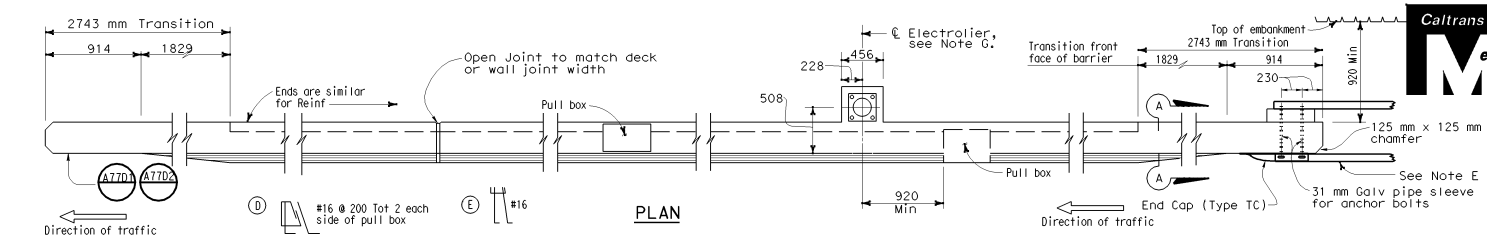

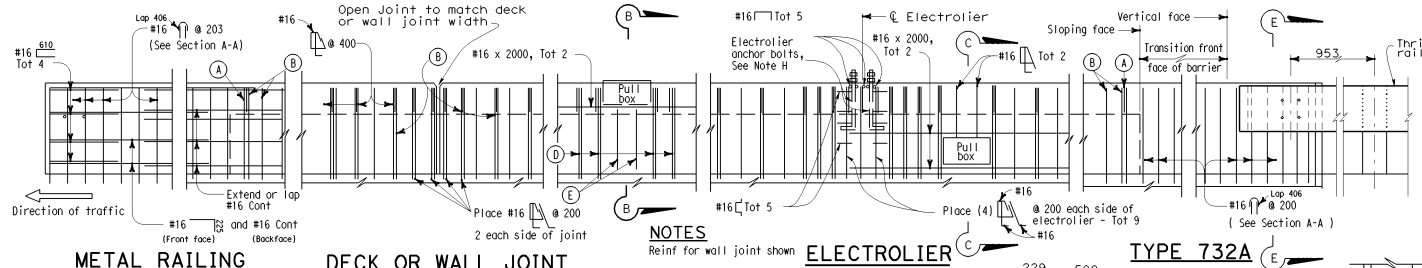

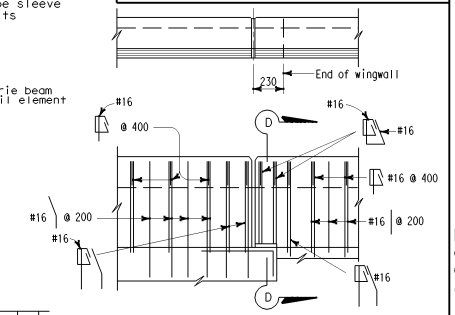

METAL RAILING CONNECTION

DECK OR WALL JOINT

NOTES

Reinf for wall joint shown

ELEVATION

ELECTROLIER

(See Note F)

TYPE 732A

TYPE 732A

TYPE 732B

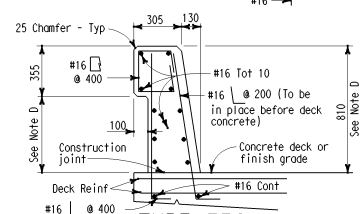

TYPE 732

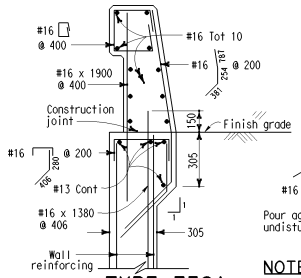

TYPE 732A

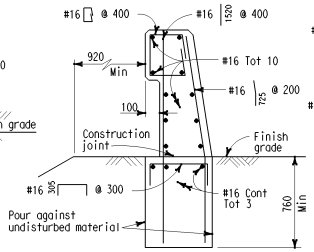

TYPE 732B

NOTE

Types 732A and 732B are similar to Type 732 except as noted

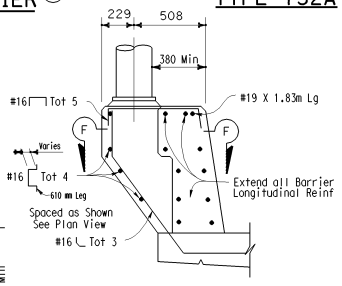

PEDESTAL ELEVATION

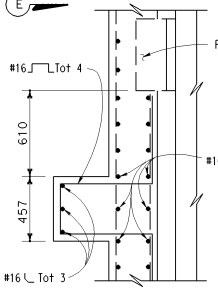

SECTION F-F

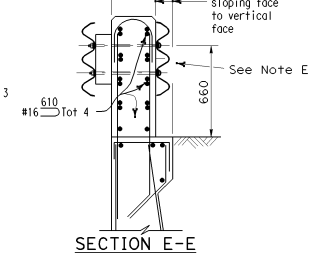

SECTION E-E

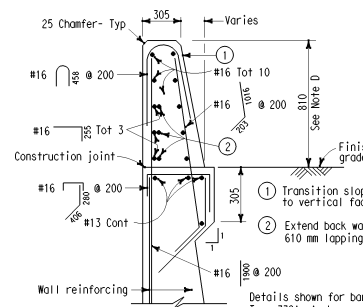

① Transition sloping face to vertical face

② Extend back wall Reinf 610 mm lapping with #16

Details shown for barrier anchorage to Type 732A. Anchorage for barrier Types 732 and 732A are similar to their respective details.

SECTION A-A

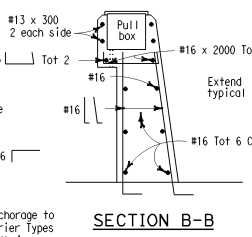

SECTION B-B

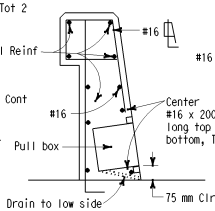

SECTION C-C

See Notes

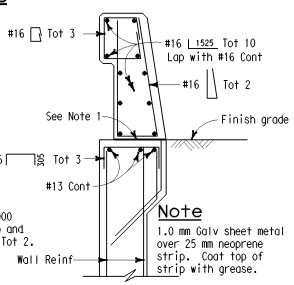

Note

1.0 mm Galv sheet metal over 25 mm neoprene strip. Coat top of strip with grease.

SECTION D-D

NOTES

A. Walls are to be backfilled before barrier is placed.

B. Clearance to reinforcing steel in barrier to be 25 mm, except as noted. Longitudinal reinforcement to stop at all expansion joints.

C. See project plans for locations of electroliers and pull boxes.

D. Dimensions may vary with roadway cross slope and with certain thickness of surfacing. See Project Plans.

E. For typical metal railing connection details not shown, see Standard Plans A77J1 and A77J2.

F. For electrical details, See Standard Plans ES-9A, ES-9B, ES-9C, ES-9D and ES-9E. The maximum number of conduits in the barrier is limited to two (2) 50 mm conduits along with one (1) 75 mm conduit. When a 75 mm conduit is used, it is restricted to the base of the barrier.

G. For electrolier mounting details, See Standard Plans ES-6A and ES-6B.

H. Minimum concrete edge distance, to the reinforcing shown, shall be maintained. Edge distance may be adjusted to accommodate increase in concrete cover for architectual treatment.

STATE OF CALIFORNIA
DEPARTMENT OF TRANSPORTATION

CONCRETE BARRIER TYPE 732

NO SCALE

ALL DIMENSIONS ARE IN MILLIMETERS UNLESS OTHERWISE SHOWN

B11-55

2004 Std PLAN B11-55

07-08-04