DIST	COUNTY	ROUTE	KILOMETER POST TOTAL PROJECT	SHEET NO.	TOTAL SHEETS

REGISTERED CIVIL ENGINEER

July 1, 2004
PLANS APPROVAL DATE

REGISTERED PROFESSIONAL ENGINEER Overcomer Y. Hor No. 45803 Exp. 12-31-06 CIVIL STATE OF CALIFORNIA

The State of California or its officers or agents shall not be responsible for the accuracy or completeness of electronic copies of this plan sheet.

To get to the Caltrans web site, go to: http://www.dot.ca.gov

Caltrans Metric

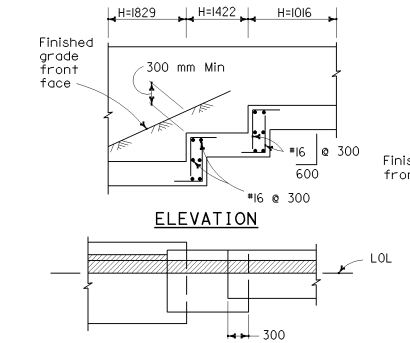

FOOTING STEP DETAILS

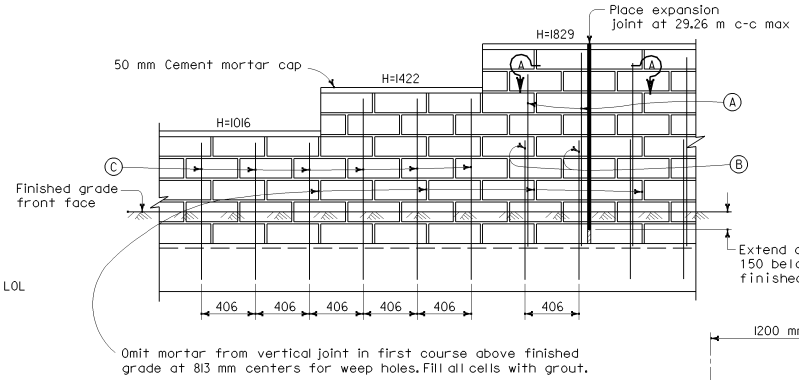

ELEVATION - MASONRY CONSTRUCTION

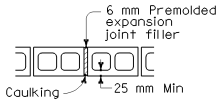

SECTION A-A

DESIGN DATA

Masonry: f_m = 3.5 MPa f'_m = 10.5 MPa f_s = 168 MPa n = 20

Reinforced Concrete: f_c = 10 MPa f'_c = 25 MPa f_s = 168 MPa n = 10

Earth = 19 kN/m^3

Minimum allowable soil bearing capacity of foundation material = 95 kPa

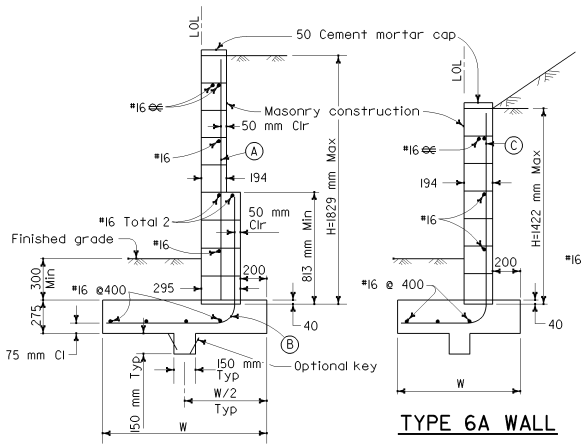

TYPE 6A WALL

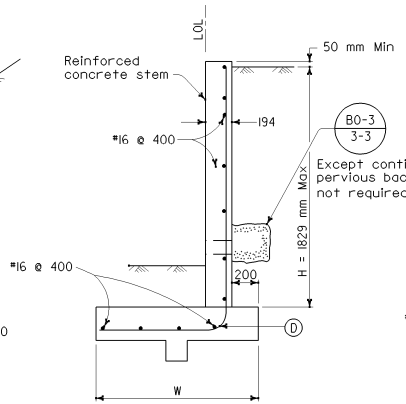

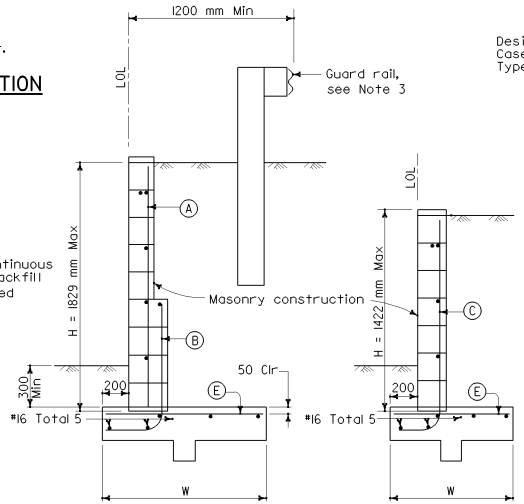

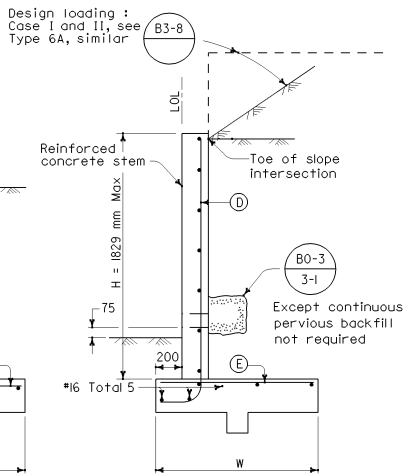

TYPE 6B WALL

Type	Design H	1016	1219	1422	1626	1829
6A	W	1000	1100	1200	1300	1400
6A	(A)				#16@406	#16@406
6A	(B)				#16@406	#16@406
6A	(C)	#16@406	#16@406	#16@406		
6A	(D)	#16@375	#16@375	#16@375	#16@375	#16@300

NOTES

1. For details not shown at "6B", see "6A".
2. Type 6 retaining wall shall be limited to use for walls of Design H of 1829 mm or less.
3. Where traffic is adjacent to the top of wall, guard rails should be set back from the top front face of wall at least 1200 mm.
4. Unless otherwise stipulated, the contractor will have the option of constructing the Type 6 walls of either masonry or reinforced concrete.
5. For reinforced concrete wall stem joint details, See B0-3/3-3 and B0-3/3-4.
6. No splices are allowed on (A), (B) and (C) bars.
7. At (D) bar, no splices are allowed within 500 mm above the top of footing.

Type	Design H	1016	1219	1422	1626	1829
6B	W	850	950	1050	1150	1250
6B	(A)				#16@406	#16@406
6B	(B)				#16@406	#16@406
6B	(C)	#16@406	#16@406	#16@406		
6B	(D)	#16@375	#16@375	#16@375	#16@375	#16@300
6B	(E)	#16@375	#16@375	#16@375	#16@375	#16@300

STATE OF CALIFORNIA
DEPARTMENT OF TRANSPORTATION

RETAINING WALL TYPE 6 1829 mm MAXIMUM

NO SCALE

ALL DIMENSIONS ARE IN MILLIMETERS UNLESS OTHERWISE SHOWN

B3-11

03-26-04