DIST	COUNTY	ROUTE	KILOMETER POST TOTAL PROJECT	SHEET NO.	TOTAL SHEETS

Caltrans Metric

REGISTERED CIVIL ENGINEER

July 1, 2004
PLANS APPROVAL DATE

REGISTERED PROFESSIONAL ENGINEER Ellis K. Hirst No. C17926 Exp. 6-30-05 CIVIL STATE OF CALIFORNIA

The State of California or its officers or agents shall not be responsible for the accuracy or completeness of electronic copies of this plan sheet.

To get to the Caltrans web site, go to: http://www.dot.ca.gov

NOTES

1. See Standard Plan A77K1 for additional connection details to bridges with sidewalks.
2. Direction of adjacent traffic indicated by ⟶ .
3. For additional details of Transition Railing (Type WB), see Standard Plan A77J4. Transition Railing (Type WB) transitions the 12 gage w-beam standard railing section of guard railing to a heavier gage nested thrie beam railing which is connected to the concrete bridge railing.
4. For typical use of Connection Detail FF, see Layout Types 12A and 12B on Standard Plan A77F1.
5. For typical use of Connection Detail HH, see Layout Types 12AA and 12BB on Standard Plan A77F4.
6. Where the bridge sidewalk is not continued beyond the end of the bridge railing, the portion of the sidewalk beyond each end of the bridge railing shall be transitioned down from the top elevation of the sidewalk, for its entire width, to the finished grade of the adjacent roadbed. The longitudinal slope of each sidewalk elevation transition shall not exceed 8.33 percent.

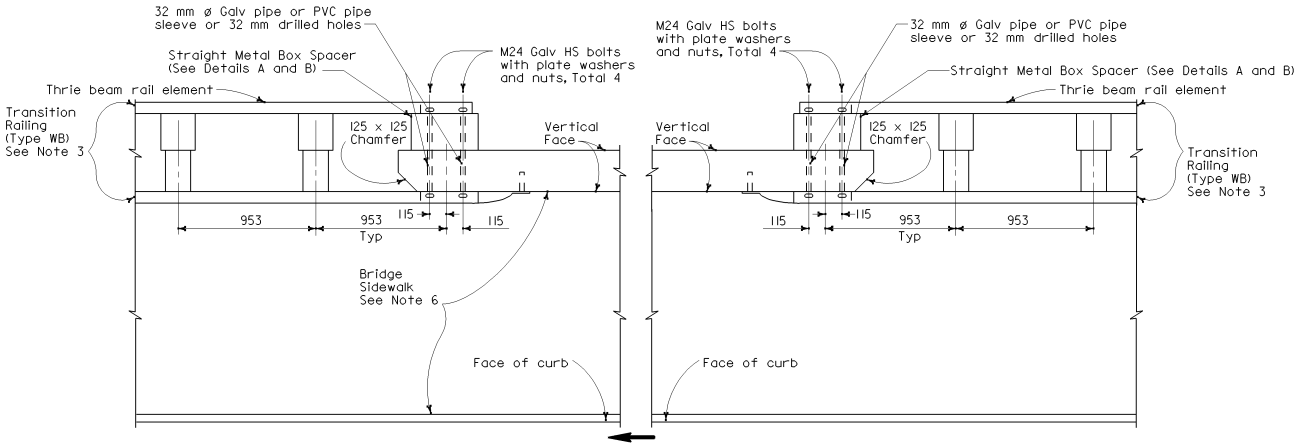

PLAN

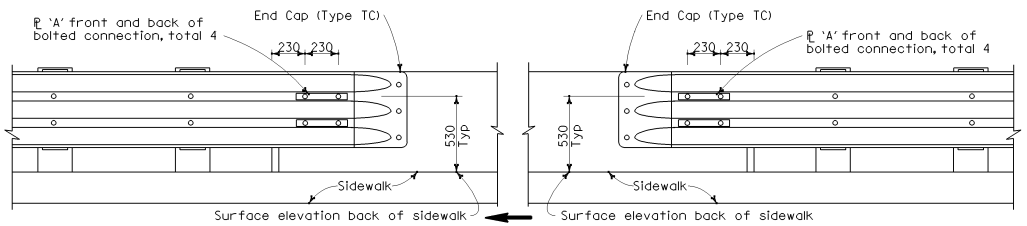

CONNECTION DETAIL HH
See Notes 5

CONNECTION DETAIL FF
See Notes 4

ELEVATION

GUARD RAILING CONNECTION TO BRIDGE RAILING WITH SIDEWALKS

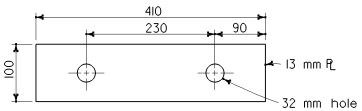

PLATE 'B'
(For backside of connection SB)

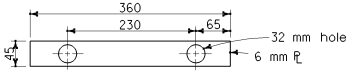

PLATE 'A'

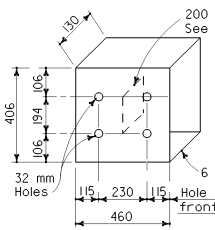

DETAIL A

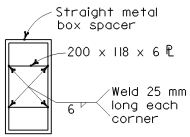

DETAIL B

STRAIGHT METAL BOX SPACER

STATE OF CALIFORNIA
DEPARTMENT OF TRANSPORTATION

METAL BEAM GUARD RAILING CONNECTIONS TO BRIDGE RAILINGS WITH SIDEWALKS DETAILS No.2

NO SCALE

ALL DIMENSIONS ARE IN MILLIMETERS UNLESS OTHERWISE SHOWN

A77K2

2004 Std PLAN A77K2

04-30-04