DIST	COUNTY	ROUTE	KILOMETER POST TOTAL PROJECT	SHEET NO.	TOTAL SHEETS

Caltrans Metric

REGISTERED CIVIL ENGINEER

July 1, 2004
PLANS APPROVAL DATE

REGISTERED PROFESSIONAL ENGINEER
Ellis K. Hirst
No. C17926
Exp. 6-30-05
CIVIL
STATE OF CALIFORNIA

The State of California or its officers or agents shall not be responsible for the accuracy or completeness of electronic copies of this plan sheet.

To get to the Caltrans web site, go to: http://www.dot.ca.gov

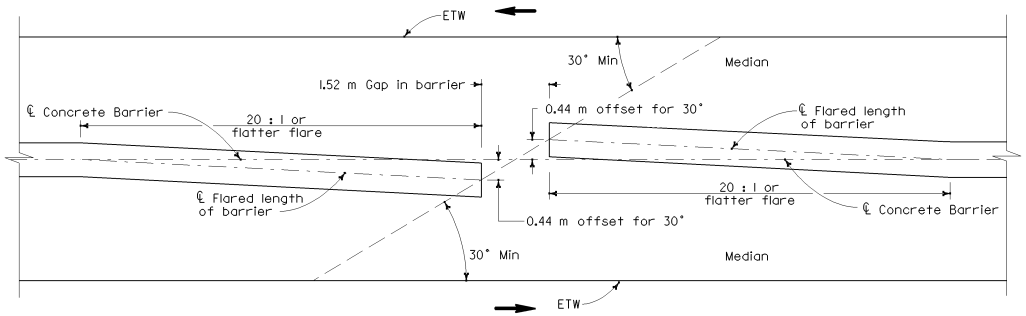

PLAN

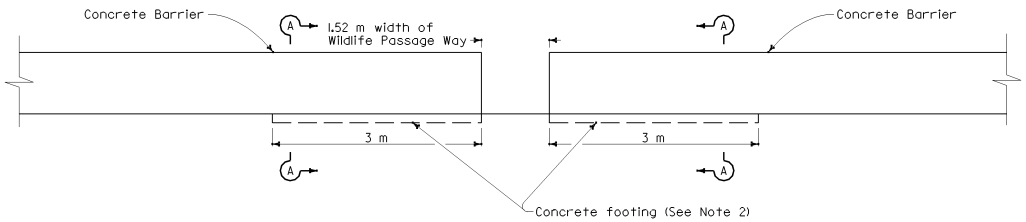

ELEVATION

NOTES

1. Type L Passage Way typically used for crossing of large size animals.
2. Barrier end anchorage shall be constructed as shown in Section A-A of this plan or as shown on Standard Plan A76B.
3. Direction of traffic indicated by ➡.

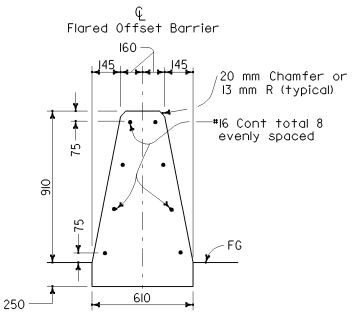

SECTION A-A
See Note 2

STATE OF CALIFORNIA
DEPARTMENT OF TRANSPORTATION

CONCRETE BARRIER WILDLIFE PASSAGE WAY (TYPE L)

NO SCALE

ALL DIMENSIONS ARE IN MILLIMETERS UNLESS OTHERWISE SHOWN

A76L

2004 Std PLAN A76L

06-23-04