DIST	COUNTY	ROUTE	KILOMETER POST TOTAL PROJECT	SHEET NO.	TOTAL SHEETS

REGISTERED CIVIL ENGINEER

July 1, 2002
PLANS APPROVAL DATE

REGISTERED PROFESSIONAL ENGINEER — Jeffrey B. Woody — No. C41260 — Exp. 3-31-03 — CIVIL — STATE OF CALIFORNIA

The State of California or its officers or agents shall not be responsible for the accuracy or completeness of electronic copies of this plan sheet.

Caltrans now has a web site! To get to the web site, go to: http://www.dot.ca.gov

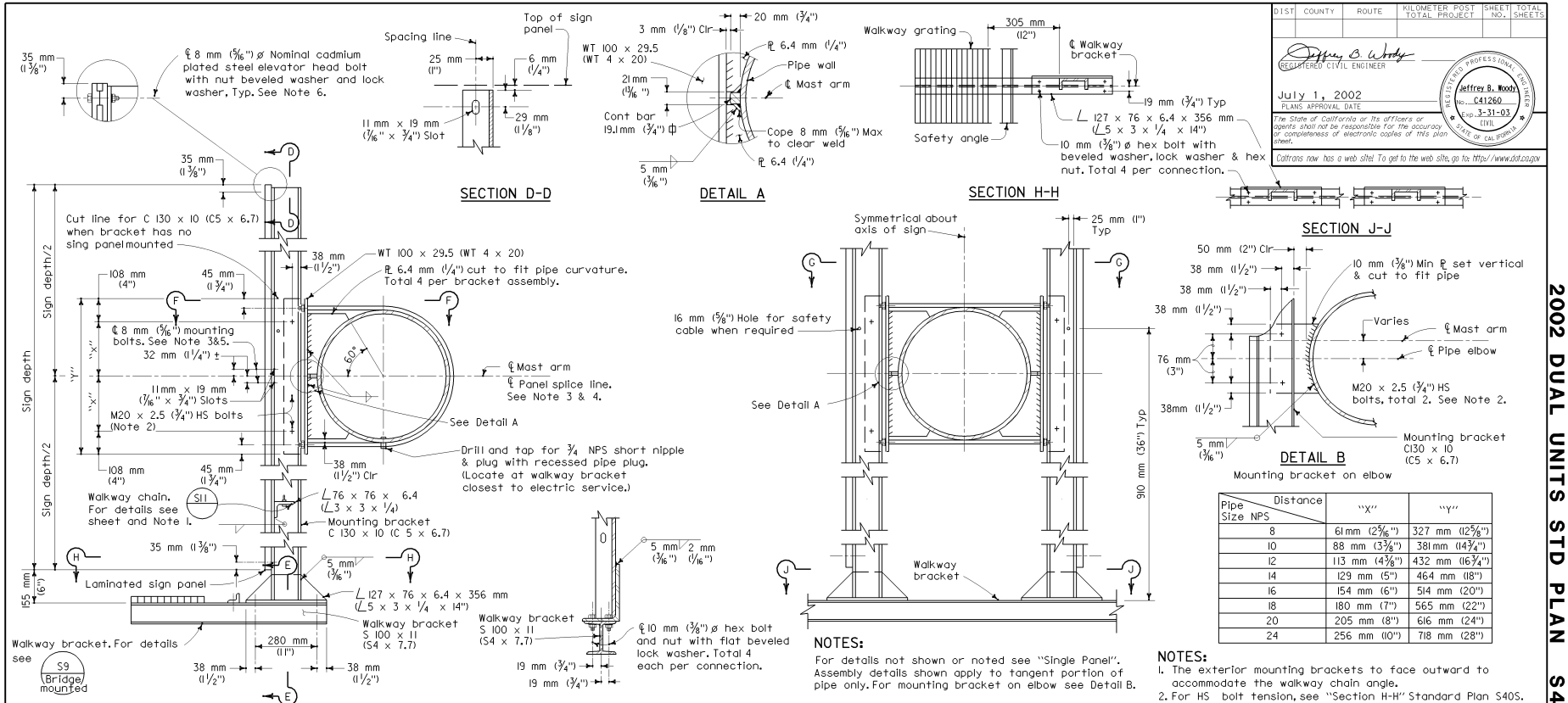

MOUNTING BRACKET ASSEMBLY DETAILS

Pipe Size NPS \ Distance	"X"	"Y"
8	61 mm (2 5/16")	327 mm (12 5/8")
10	88 mm (3 3/16")	381 mm (14 3/4")
12	113 mm (4 3/8")	432 mm (16 3/4")
14	129 mm (5")	464 mm (18")
16	154 mm (6")	514 mm (20")
18	180 mm (7")	565 mm (22")
20	205 mm (8")	616 mm (24")
24	256 mm (10")	718 mm (28")

NOTES:
1. The exterior mounting brackets to face outward to accommodate the walkway chain angle.
2. For HS bolt tension, see "Section H-H" Standard Plan S40S.
3. Splice line not necessarily ℄ mast arm. Exact location is dependent on sign panel manufacturer.
4. Install aluminum "H" Section closure extrusions at vertical and horizontal sign panel splice lines.
5. Drill through panel at integral track. Install elevator bolt with interstate green finish on head. Typical at panel splice.
6. Remove reflector. Drill through panel at integral track. Install elevator head bolt and attach reflector. Typical at border.

NOTES:
For details not shown or noted see "Single Panel". Assembly details shown apply to tangent portion of pipe only. For mounting bracket on elbow see Detail B.

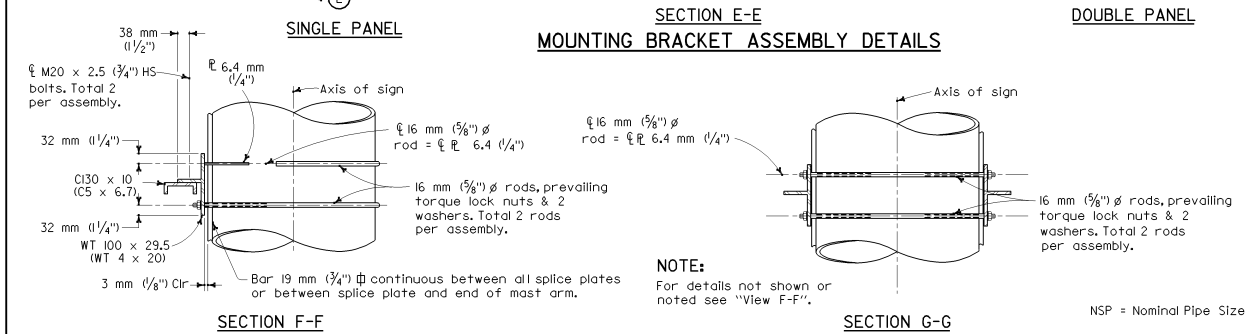

NOTE:
For details not shown or noted see "View F-F".

NSP = Nominal Pipe Size

STATE OF CALIFORNIA
DEPARTMENT OF TRANSPORTATION

OVERHEAD SIGNS-TUBULAR STRUCTURAL FRAME DETAILS NO.1

These "Standard Plans for Construction of Local Streets and Roads" contain units in two systems of measurement: International System of Units (SI or "metric") and United States Standard Measures shown in the parentheses ( ). The measurements expressed in the two systems are not necessarily equal or interchangeable. See the "Foreword" at the beginning of this publication.

NO SCALE

S40R

2002 DUAL UNITS STD PLAN S40R