| DIST | COUNTY | ROUTE | KILOMETER POST TOTAL PROJECT | SHEET NO. | TOTAL SHEETS |
|---|---|---|---|---|---|
| | | | | | |

REGISTERED CIVIL ENGINEER

July 1, 2002
PLANS APPROVAL DATE

REGISTERED PROFESSIONAL ENGINEER
Jeffrey B. Woody
No. C41260
Exp. 3-31-03
CIVIL
STATE OF CALIFORNIA

The State of California or its officers or agents shall not be responsible for the accuracy or completeness of electronic copies of this plan sheet.

Caltrans now has a web site! To get to the web site, go to: http://www.dot.ca.gov

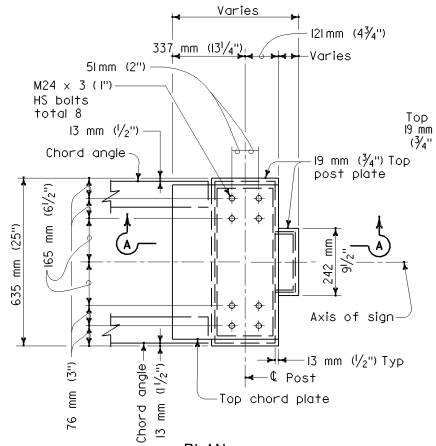


PLAN

TYPE E-1 AND E-2 POST

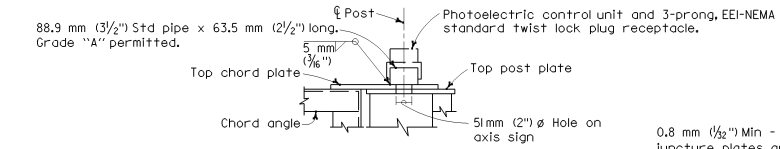


WITH PHOTOELECTRIC CONTROL UNIT

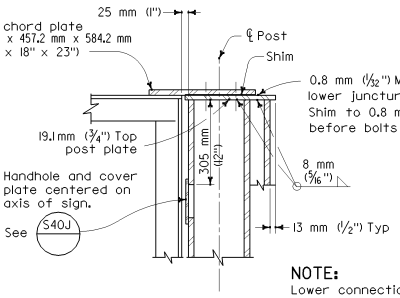


SECTION A-A

NOTE:
Lower connection plates shall be machined or straightened after welding to provide full contact between faying surfaces before bolting. Shims shall be used where clearance between top chord plate and top post plate exceeds 0.8 mm (1/32). Predrill and galvanize shims to fit bolt group; minimum; shim size to include 2 bolts.

UPPER JUNCTION CONNECTION

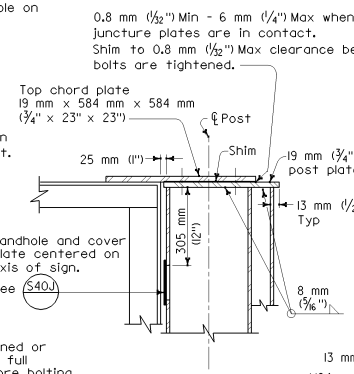


SECTION C-C

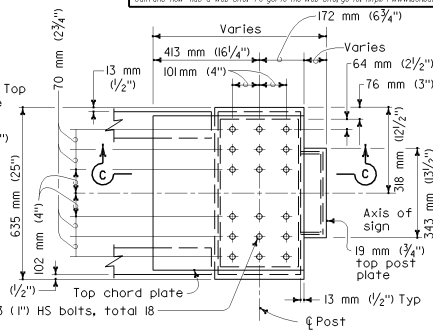


PLAN

TYPE E-3 AND E-4 POST

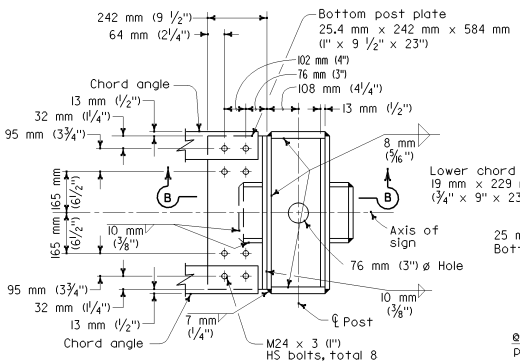


PLAN

TYPE E-1 AND E-2 POST

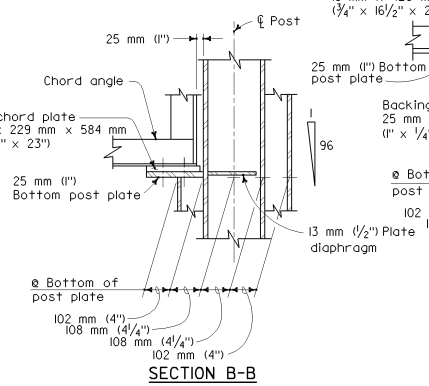


SECTION B-B

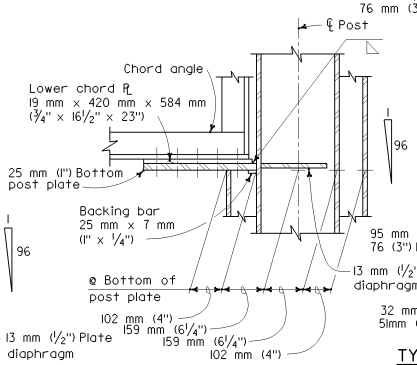


SECTION D-D

LOWER JUNCTION CONNECTION

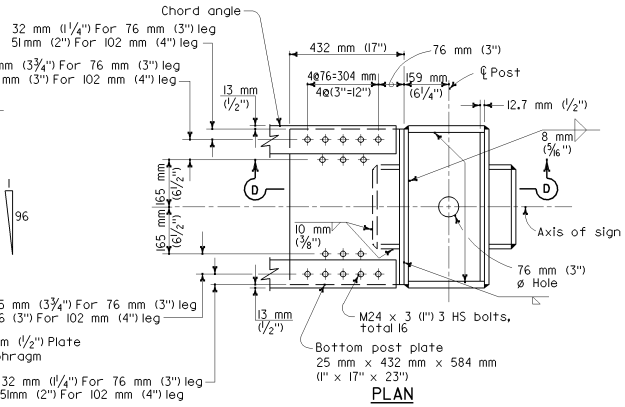


PLAN

TYPE E-3 AND E-4 POST

STATE OF CALIFORNIA
DEPARTMENT OF TRANSPORTATION

# OVERHEAD SIGNS-BOX BEAM CLOSED TRUSS SINGLE POST CANTILEVER FRAME JUNCTURE DETAILS

These "Standard Plans for Construction of Local Streets and Roads" contain units in two systems of measurement: International System of Units (SI or "metric") and United States Standard Measures shown in the parentheses (). The measurements expressed in the two systems are not necessarily equal or interchangeable. See the "Foreword" at the beginning of this publication.

NO SCALE

**S40I**

2002 DUAL UNITS STD PLAN S40I