DIST	COUNTY	ROUTE	KILOMETER POST TOTAL PROJECT	SHEET NO.	TOTAL SHEETS

REGISTERED CIVIL ENGINEER

July 1, 2002
PLANS APPROVAL DATE

REGISTERED PROFESSIONAL ENGINEER Jeffrey B. Woody No. C41260 Exp. 3-31-03 CIVIL STATE OF CALIFORNIA

The State of California or its officers or agents shall not be responsible for the accuracy or completeness of electronic copies of this plan sheet.

Caltrans now has a web site! To get to the web site, go to: http://www.dot.ca.gov

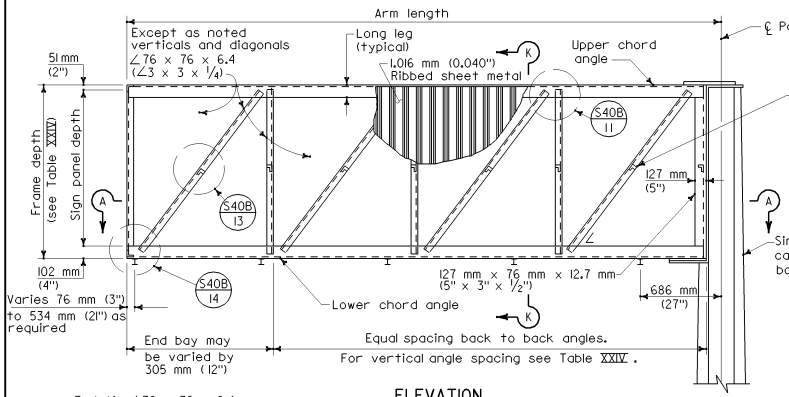

ELEVATION

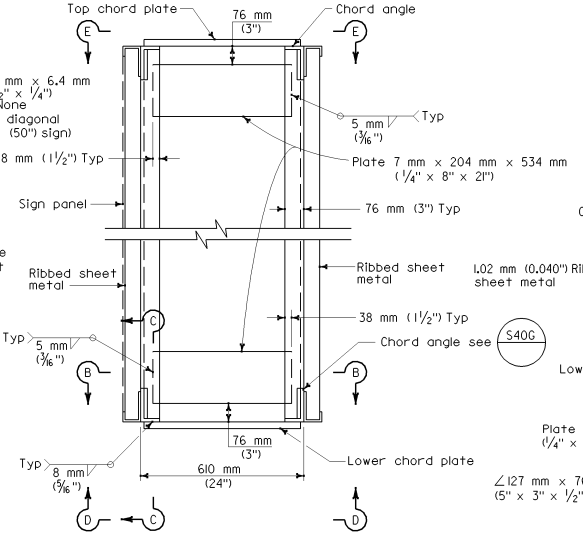

POST END VIEW

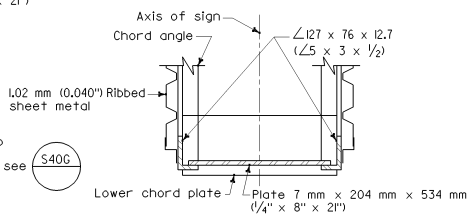

SECTION B-B

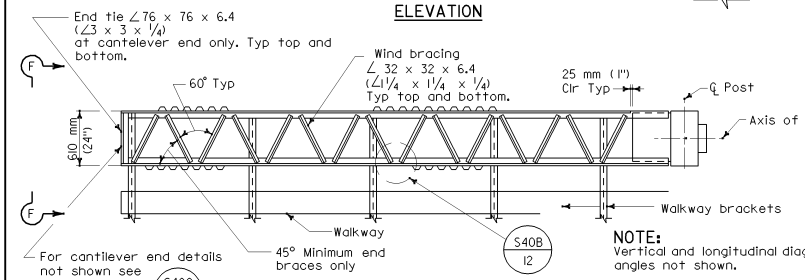

SECTION A-A

NOTE:
Vertical and longitudinal diagonal angles not shown.

NOTES:
1. For Section K-K see S40B
2. For View F-F at cantilever end, see S40D

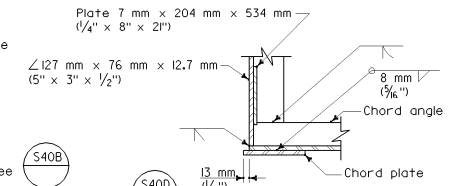

SECTION C-C

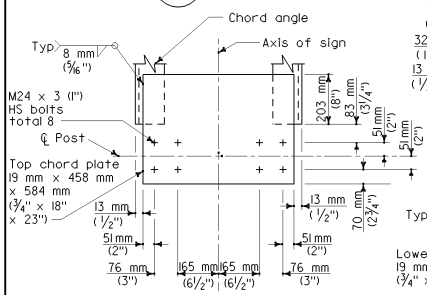

SECTION E-E

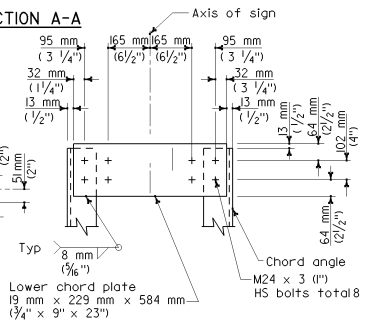

SECTION D-D

TYPE E-1 AND TYPE E-2

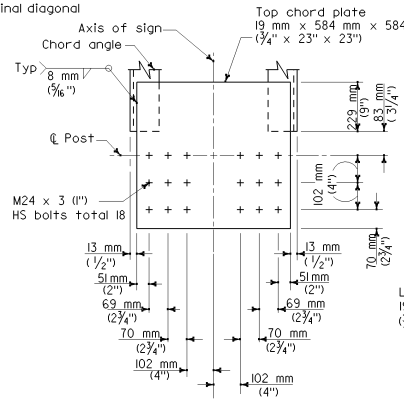

SECTION E-E

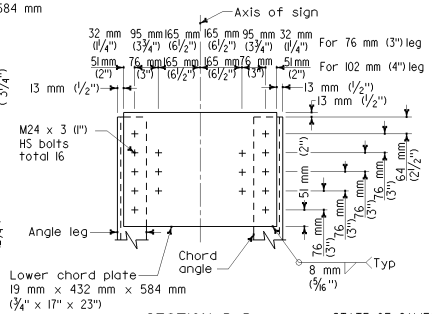

SECTION D-D

TYPE E-3 AND TYPE E-4

CHORD PLATE DETAILS

TABLE XXIV

SIGN PANEL DEPTH	FRAME DEPTH	MAXIMUM VERTICAL ANGLE SPACING
1270 mm (50")	1423 mm (56")	1372 mm (54")
1778 mm (70")	1931 mm (76")	1677 mm (66")
2032 mm (80")	2185 mm (86")	1829 mm (72")
2286 mm (90")	2439 mm (96")	2134 mm (84")
2540 mm (100")	2693 mm (106")	2134 mm (84")
2794 mm (110")	2947 mm (116")	2286 mm (90")
3048 mm (120")	3201 mm (126")	2286 mm (90")

STATE OF CALIFORNIA
DEPARTMENT OF TRANSPORTATION

OVERHEAD SIGNS-BOX BEAM CLOSED TRUSS SINGLE POST CANTILEVER FRAME DETAILS

These "Standard Plans for Construction of Local Streets and Roads" contain units in two systems of measurement: International System of Units (SI or "metric") and United States Standard Measures shown in the parentheses ( ). The measurements expressed in the two systems are not necessarily equal or interchangeable. See the "Foreword" at the beginning of this publication.

NO SCALE

S40H

2002 DUAL UNITS STD PLAN S40H