DIST	COUNTY	ROUTE	KILOMETER POST TOTAL PROJECT	SHEET NO.	TOTAL SHEETS

REGISTERED CIVIL ENGINEER

July 1, 2002
PLANS APPROVAL DATE

REGISTERED PROFESSIONAL ENGINEER Jeffrey B. Woody No. C41260 Exp. 3-31-03 CIVIL STATE OF CALIFORNIA

The State of California or its officers or agents shall not be responsible for the accuracy or completeness of electronic copies of this plan sheet.

Caltrans now has a web site! To get to the web site, go to: http://www.dot.ca.gov

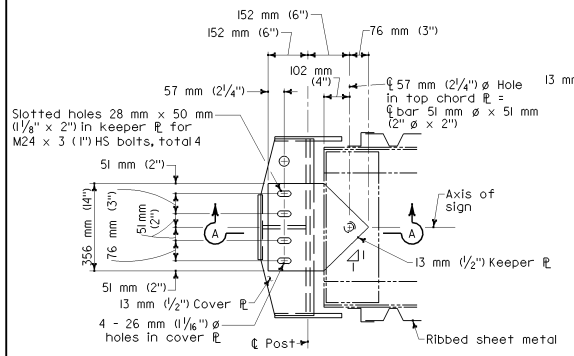

PLAN

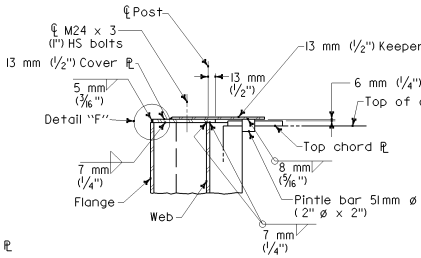

SECTION A-A

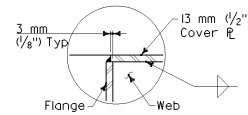

DETAIL F

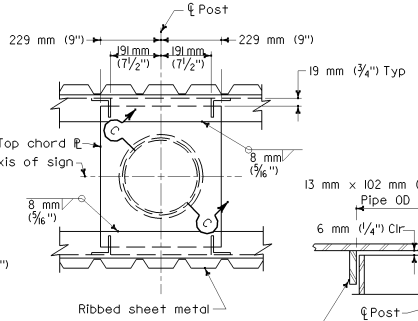

PLAN

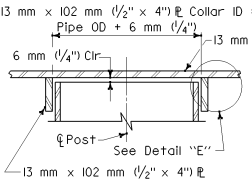

SECTION C-C

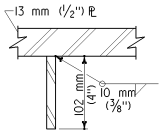

DETAIL F

UPPER JUNCTURE CONNECTION END POST

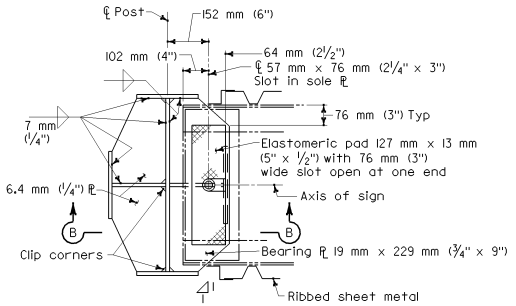

PLAN

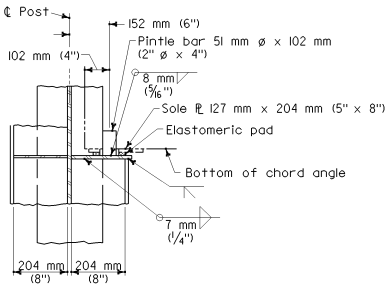

SECTION B-B

LOWER JUNCTURE CONNECTION END POST

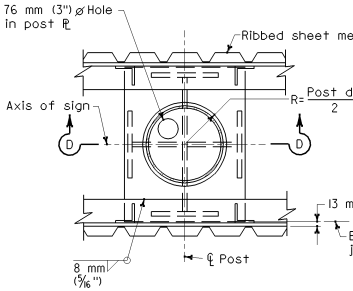

PLAN

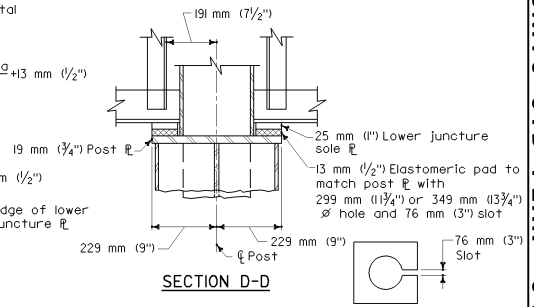

SECTION D-D

LOWER JUNCTURE CONNECTION INSET POST

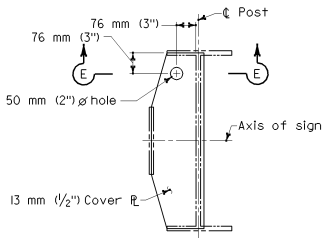

PLAN

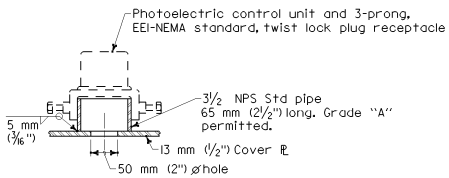

SECTION E-E

PHOTOELECTRIC CONTROL UNIT

STATE OF CALIFORNIA
DEPARTMENT OF TRANSPORTATION

OVERHEAD SIGNS-BOX BEAM CLOSED TRUSS-TWO POST TYPE FRAME JUNCTURE DETAILS

These "Standard Plans for Construction of Local Streets and Roads" contain units in two systems of measurement: International System of Units (SI or "metric") and United States Standard Measures shown in the parentheses ( ). The measurements expressed in the two systems are not necessarily equal or interchangeable. See the "Foreword" at the beginning of this publication.

NO SCALE

S40E

2002 DUAL UNITS STD PLAN S40E