DIST	COUNTY	ROUTE	KILOMETER POST TOTAL PROJECT	SHEET NO.	TOTAL SHEETS

REGISTERED CIVIL ENGINEER

July 1, 2002
PLANS APPROVAL DATE

REGISTERED PROFESSIONAL ENGINEER Jeffrey B. Woody No. C41260 Exp. 3-31-03 CIVIL STATE OF CALIFORNIA

The State of California or its officers or agents shall not be responsible for the accuracy or completeness of electronic copies of this plan sheet.

Caltrans now has a web site! To get to the web site, go to: http://www.dot.ca.gov

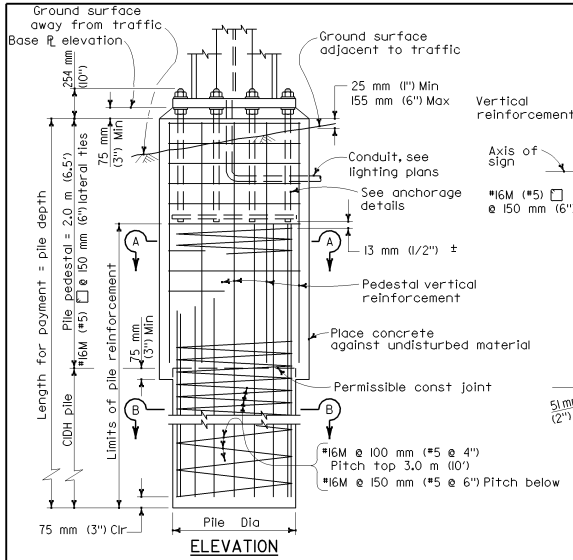

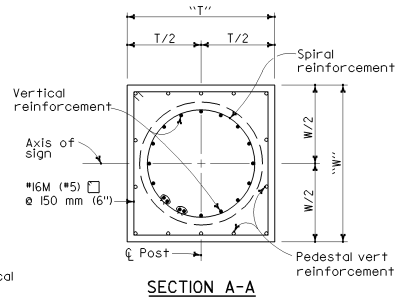

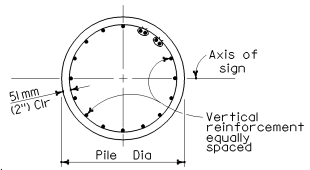

PILE FOUNDATION

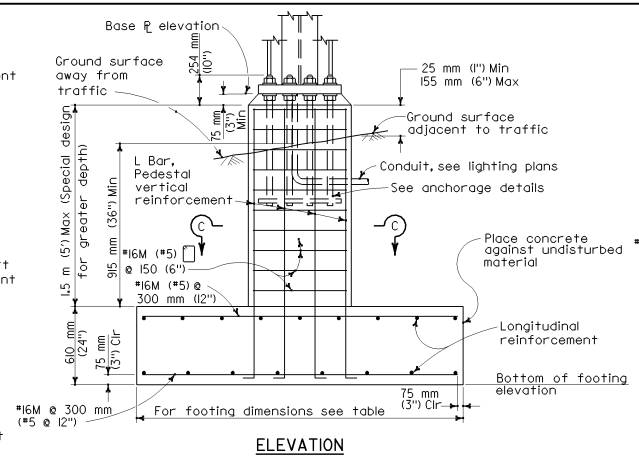

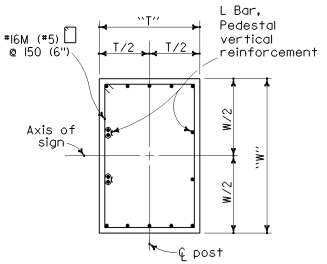

SPREAD FOOTING

NOTES:

1. Base plates, pedestals and footings; longer sides shall be normal to axis of sign.
2. For anchor bolt layout see Standard Plans S40F and S40J.
3. For base plate elevation see Format sheet.
4. Prior to erection of the post, backfill which is equivalent to the surrounding material shall be in place.
5. Pile pedestal shall be formed 155 mm (6") minimum below ground surface. Remainder to be placed against undisturbed material.
6. Pile footing - use foundation depth shown in table unless otherwise shown on Format sheet.
7. On single post sign structures the post shall be raked out of plumb with the use of the levelling nuts to make the bottom of the sign frame level.

TWO POST TYPE

Post Type	Pedestal Size "T" x "W"	Pile Foundation: Vertical Reinf	Pile Foundation: Pile Dia	Pile Foundation: Pile Depth	Pile Foundation: Pedestal Vert Reinf	Spread Footing: Footing Dimension	Spread Footing: Top Reinf Longit	Spread Footing: Top Reinf Transv	Spread Footing: Bottom Reinf Longit	Spread Footing: Bottom Reinf Transv
A-1	1.05 m x 1.25 m (41" x 49")	16-#25M (#8)	920 mm (36")	4.3 m (14')	14-#22M (#7)	2.2 m x 4.9 m (7' x 16')	7-#16M (#5)	#16M @ 300 mm (#5 @ 12")	6-#29M (#9)	#16M @ 300 mm (#5 @ 12")
A-2		16-#29M (#9)		4.9 m (16')	14-#25M (#8)	2.5 m x 5.2 m (8' x 17')	10-#16M (#5)		10-#29M (#9)	
A-3		16-#36M (#11)		6.1 m (20')	14-#29M (#9)	2.5 m x 5.5 m (8' x 18')	8-#19M (#6)		9-#36M (#11)	
A-4		*24-#36M (#11)		6.4 m (21')	14-#29M (#9)	2.5 m x 6.1 m (8' x 20')	8-#25M (#8)		11-#36M (#11)	
A-5		*24-#36M (#11)		6.4 m (21')	14-#32M (#10)	2.5 m x 6.1 m (8' x 20')	8-#25M (#8)		11-#36M (#11)	
B-1	1.05 m x 1.35 m (41" x 53")	*16-#36M (#11)		6.1 m (20')	14-#25M (#8)	2.5 m x 5.5 m (8' x 18')	8-#19M (#6)		9-#36M (#11)	
B-2	1.05 m x 1.35 m (41" x 53")	*24-#36M (#11)		6.7 m (22')	14-#29M (#9)	2.5 m x 6.1 m (8' x 20')	10-#19M (#6)		11-#36M (#11)	
B-3	1.05 m x 1.40 m (41" x 55")	*28-#36M (#11)		7.4 m (24')	14-#32M (#10)	2.5 m x 6.4 m (8' x 21')	7-#25M (#8)		13-#36M (#11)	
B-4	1.20 m x 1.40 m (47" x 55")	*24-#36M (#11)	1070 mm (42")	6.7 m (22')	14-#32M (#10)	2.5 m x 6.7 m (8' x 22')	7-#25M (#8)		14-#36M (#11)	
B-5	1.20 m x 1.40 m (47" x 55")	*24-#36M (#11)		7.0 m (23')	14-#32M (#10)	2.5 m x 7.1 m (8' x 23')	8-#25M (#8)		15-#36M (#11)	
C-1	1.05 m x 1.05 m (41" x 41")	16-#29M (#9)	920 mm (36")	4.9 m (16')	14-#22M (#7)	2.2 m x 4.9 m (7' x 16')	6-#19M (#6)		7-#36M (#11)	
C-2	1.05 m x 1.15 m (41" x 45")	16-#36M (#11)		5.8 m (19')	14-#29M (#9)	2.5 m x 5.2 m (8' x 17')	8-#19M (#6)		9-#36M (#11)	
C-3	1.05 m x 1.15 m (41" x 45")	*24-#36M (#11)		6.4 m (21')	14-#32M (#10)	2.5 m x 5.8 m (8' x 19')	9-#19M (#6)		11-#36M (#11)	
C-4	1.05 m x 1.15 m (41" x 45")	*28-#36M (#11)		7.4 m (24')	14-#32M (#10)	2.5 m x 6.4 m (8' x 21')	7-#25M (#8)		13-#36M (#11)	
C-5	1.20 m x 1.20 m (47" x 47")	*24-#36M (#11)		6.7 m (22')	14-#36M (#11)	2.5 m x 6.7 m (8' x 22')	8-#25M (#8)		15-#36M (#11)	
C-6		*24-#36M (#11)	1070 mm (42")	7.1 m (23')	14-#36M (#11)	2.5 m x 7.1 m (8' x 23')	8-#25M (#8)		16-#36M (#11)	
C-7		*28-#36M (#11)		7.4 m (24')	14-#36M (#11)	2.5 m x 7.1 m (8' x 23')	8-#25M (#8)		12-#43M (#14)	
C-8		*34-#36M (#11)		7.7 m (25')	*28-#32M (#10)	2.5 m x 7.4 m (8' x 24')	9-#25M (#8)		13-#43M (#14)	
D-1	1.05 m x 1.25 m (41" x 49")	*24-#36M (#11)	920 mm (36")	6.4 m (21')	14-#29M (#9)	2.5 m x 5.8 m (8' x 19')	9-#19M (#6)		10-#36M (#11)	
D-2	1.05 m x 1.30 m (41" x 51")	*28-#36M (#11)		7.4 m (24')	14-#32M (#10)	2.5 m x 6.4 m (8' x 21')	7-#25M (#8)		13-#36M (#11)	
D-3	1.20 m x 1.30 m (47" x 51")	*24-#36M (#11)	1070 mm (42")	7.4 m (24')	14-#36M (#11)	2.5 m x 7.1 m (8' x 23')	8-#25M (#8)		16-#36M (#11)	
D-4		*34-#36M (#11)		8.3 m (27')	14-#36M (#11)	2.5 m x 7.1 m (8' x 23')	8-#25M (#8)		18-#36M (#11)	
D-5		*34-#36M (#11)		9.2 m (30')	*28-#32M (#10)	2.5 m x 7.7 m (8' x 25')	9-#25M (#8)		14-#43M (#14)	
D-6	1.30 m x 1.40 m (51" x 55")	*34-#36M (#11)		9.2 m (30')	14-#36M (#11)	2.5 m x 8.0 m (8' x 26')	10-#25M (#8)		14-#43M (#14)	
D-7		*34-#36M (#11)		9.2 m (30')	14-#36M (#11)	2.5 m x 8.0 m (8' x 26')	10-#25M (#8)		15-#43M (#14)	

* Bundled bars

SINGLE POST TYPE

Post Type	Pedestal Size "T" x "W"	Pile Foundation: Vertical Reinf	Pile Foundation: Pile Dia	Pile Foundation: Foundation Depth	Pile Foundation: Pedestal Vert Reinf	Spread Footing: Footing Dimension	Spread Footing: Top Reinf Longit	Spread Footing: Top Reinf Transv	Spread Footing: Bottom Reinf Longit	Spread Footing: Bottom Reinf Transv
E-1	1.02 m x 1.12 m (40" x 44")	16-#25M (#8)	920 mm (36")	4.0 m (13')	14-#25M (#8)	2.5 m x 4.3 m (8' x 14')	6-#16M (#5)	#16M @ 300 mm (#5 @ 12")	9-#22M (#7)	#16M @ 300 mm (#5 @ 12")
E-2	1.02 m x 1.12 m (40" x 44")	16-#29M (#9)		4.6 m (15')	14-#29M (#9)	2.8 m x 4.6 m (8' x 15')	6-#19M (#6)		9-#29M (#9)	
E-3	1.12 m x 1.12 m (44" x 44")	16-#32M (#10)		5.5 m (18')	14-#32M (#10)					
E-4	1.12 m x 1.12 m (44" x 44")	16-#36M (#11)		6.1 m (20')	14-#36M (#11)					
F-1	1.02 m x 1.12 m (40" x 44")	16-#25M (#8)		4.0 m (13')	14-#22M (#7)	2.5 m x 4.0 m (8' x 13')	8-#16M (#5)	#16M @ 300 mm (#5 @ 12")	10-#22M (#7)	#16M @ 300 mm (#5 @ 12")
F-2		16-#29M (#9)		4.6 m (15')	14-#22M (#7)	2.5 m x 4.6 m (8' x 15')	8-#16M (#5)		11-#25M (#8)	
F-3		16-#29M (#9)		4.9 m (16')	14-#25M (#8)	2.5 m x 4.9 m (8' x 16')	9-#16M (#5)		10-#29M (#9)	
F-4		16-#36M (#11)		5.8 m (19')	14-#29M (#9)	2.5 m x 5.8 m (8' x 19')	6-#19M (#6)		10-#36M (#11)	
F-5		16-#36M (#11)		6.7 m (22')	14-#32M (#10)	2.5 m x 6.1 m (8' x 20')	10-#19M (#6)		12-#36M (#11)	

STATE OF CALIFORNIA
DEPARTMENT OF TRANSPORTATION

OVERHEAD SIGNS-BOX BEAM CLOSED TRUSS FOUNDATION DETAILS

These "Standard Plans for Construction of Local Streets and Roads" contain units in two systems of measurement: International System of Units (SI or "metric") and United States Standard Measures shown in the parentheses (). The measurements expressed in the two systems are not necessarily equal or interchangeable. See the "Foreword" at the beginning of this publication.

NO SCALE

S39

THIS STANDARD PLAN S39 INCLUDES CHANGES THAT WERE INCORPORATED IN REVISED STANDARD PLAN RSP S39, DATED OCTOBER 26, 2000, AND ISSUED AS A PART OF ERRATUM NO. 99-1 FOR THE 1999 METRIC STANDARD PLANS.