DIST	COUNTY	ROUTE	KILOMETER POST TOTAL PROJECT	SHEET NO.	TOTAL SHEETS

Theresa Gabriel
REGISTERED ELECTRICAL ENGINEER

July 1, 2002
PLANS APPROVAL DATE

REGISTERED PROFESSIONAL ENGINEER
Theresa A. Gabriel
No. E15129
Exp. 6-30-04
ELECTRICAL
STATE OF CALIFORNIA

The State of California or its officers or agents shall not be responsible for the accuracy or completeness of electronic copies of this plan sheet.

Caltrans now has a web site! To get to the web site, go to: http://www.dot.ca.gov

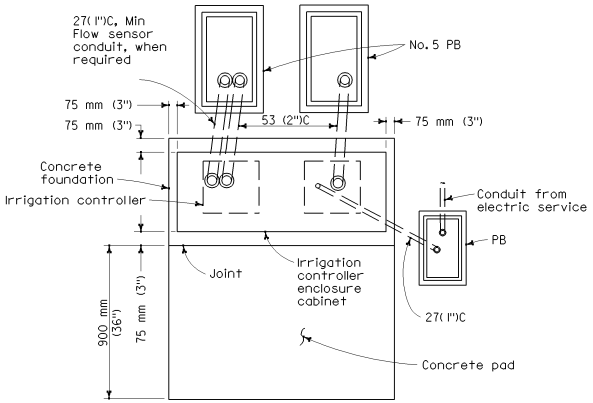

PLAN

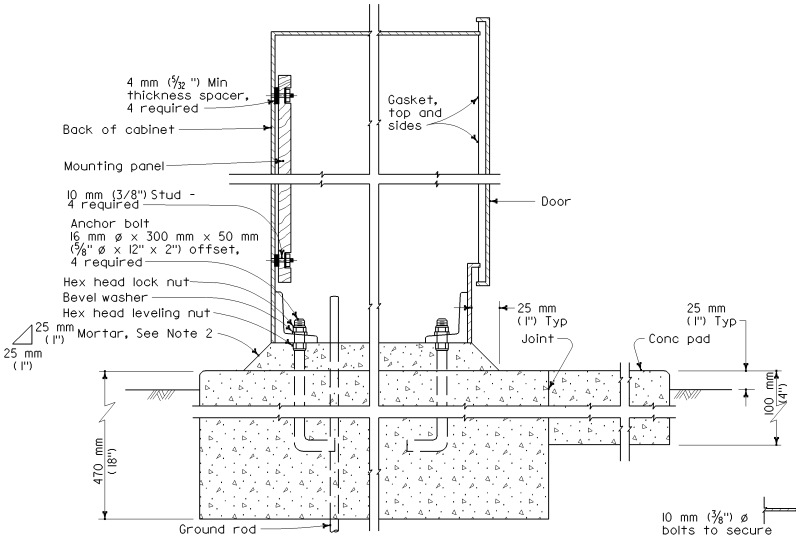

CABINET SECTION

NOTES:

1. All dimensions are nominal.
2. Mortar shall be 1-part cement, 2-parts plaster sand.
3. Rain sensor unit and/or remote control valve actuator connectors. To be provided only when specified.
4. See project plans for location and number of irrigation controllers for each cabinet.
5. Switch and GFCI outlet boxes shall be cast metal with threaded hubs and cast metal covers with gaskets. Snap switches shall be 20 A, 120/277 V specifications grade switch.

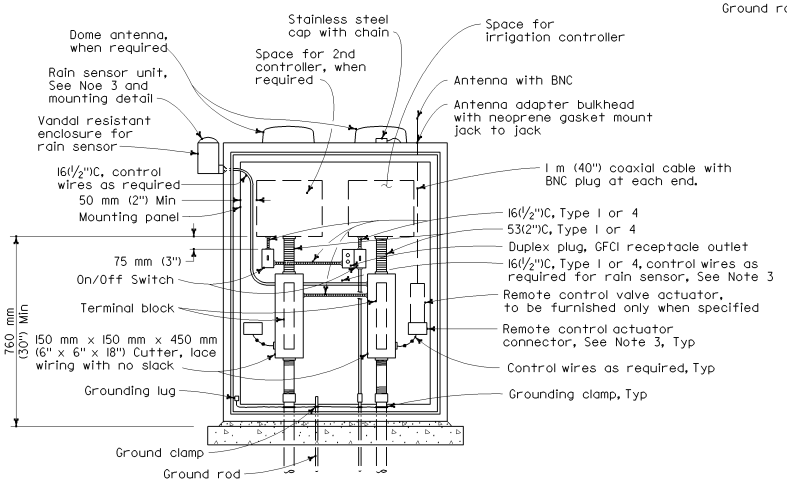

ELEVATION

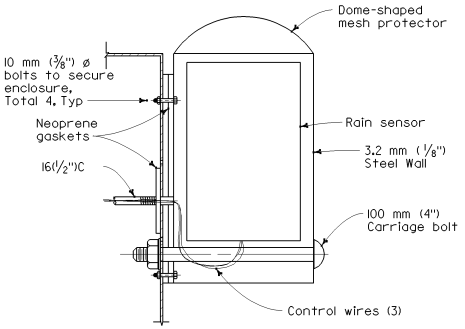

RAIN SENSOR UNIT

STATE OF CALIFORNIA
DEPARTMENT OF TRANSPORTATION

SIGNAL, LIGHTING AND ELECTRICAL SYSTEMS IRRIGATION CONTROLLER ENCLOSURE CABINET

These "Standard Plans for Construction of Local Streets and Roads" contain units in two systems of measurement: International System of Units (SI or "metric") and United States Standard Measures shown in the parentheses ( ). The measurements expressed in the two systems are not necessarily equal or interchangeable. See the "Foreword" at the beginning of this publication.

NO SCALE

ES-3H