DIST	COUNTY	ROUTE	KILOMETER POST TOTAL PROJECT	SHEET NO.	TOTAL SHEETS

Paul Cotter
REGISTERED CIVIL ENGINEER

July 1, 2002
PLANS APPROVAL DATE

REGISTERED PROFESSIONAL ENGINEER Paul Cotter No. C34509 EXP. 9-30-03 CIVIL STATE OF CALIFORNIA

The State of California or its officers or agents shall not be responsible for the accuracy or completeness of electronic copies of this plan sheet.

Caltrans now has a web site! To get to the web site, go to: http://www.dot.ca.gov

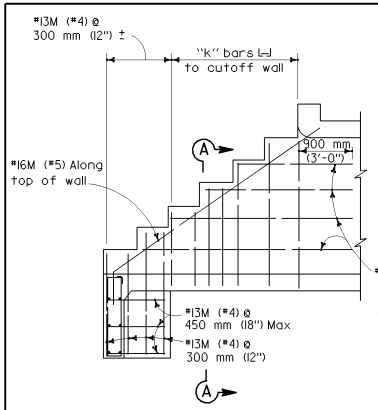

LONGITUDINAL SECTION
Showing reinforcement in outside face

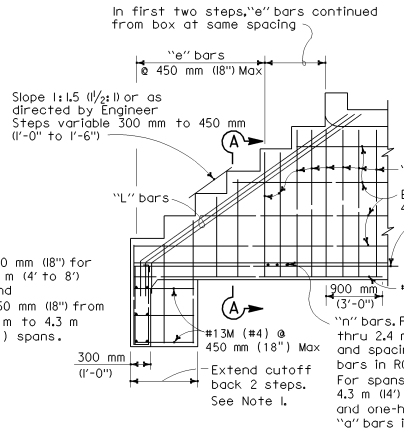

LONGITUDINAL SECTION
Showing reinforcement in inside face

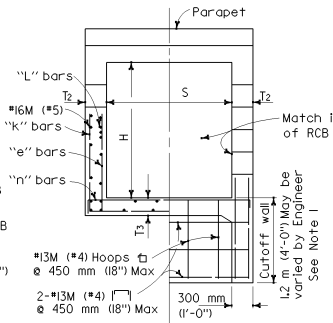

HALF SECTION A-A END ELEVATION

Dimensions S and T_3 to be same as adjacent RCB.
T_2 = Same as adjacent RCB (200 mm (8") Min).

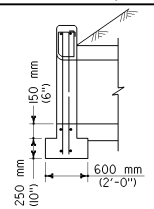

SECTION B-B

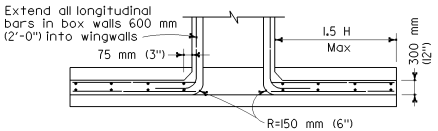

SECTION C-C

TYPE "E" STEPPED WINGWALL (SINGLE BOX CULVERT)

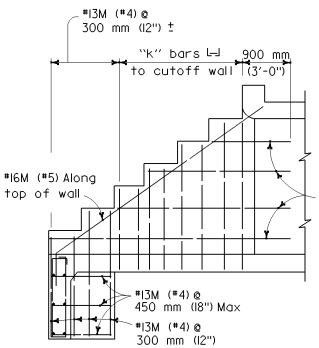

LONGITUDINAL SECTION
Showing reinforcement in outside face

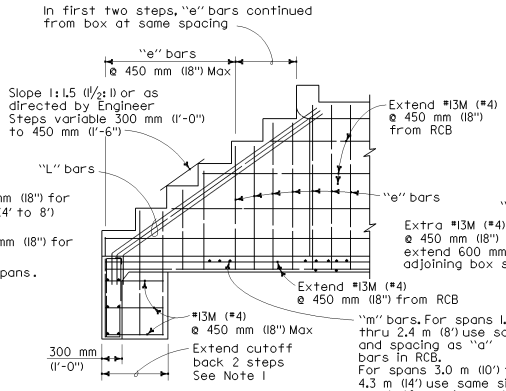

LONGITUDINAL SECTION
Showing reinforcement in inside face

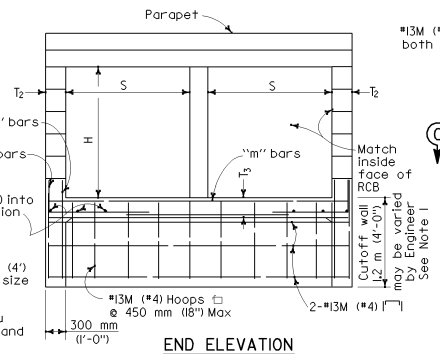

END ELEVATION

Dimensions S and T_3 to be same as adjacent RCB.
T_2 = Same as adjacent RCB (200 mm (8") min).

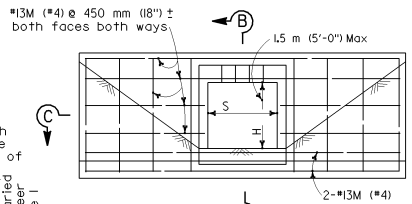

ELEVATION

TYPE "D" STRAIGHT WINGWALL

Details similar for multiple span boxes.
For Parapet Details not shown see Standard Plan D82.

TYPE "E" STEPPED WINGWALL (MULTIPLE BOX CULVERT)

NOTES:

1. Eliminate cutoff walls if adjacent channel is paved.
2. For "H" not shown use reinforcement for next greater height.

TABLE OF REINFORCEMENT FOR TYPE "E" WINGWALLS

H (See Note 2)		0.9 m (3')	1.2 m (4')	1.5 m (5')	1.8 m (6')	2.1 m (7')	2.4 m (8')	3.0 m (10')	3.7 m (12')	4.3 m (14')
"K" Bars	Bar No	13M (#4)	13M (#4)	16M (#5)	16M (#5)	16M (#5)	16M (#5)	16M (#5)	16M (#5)	16M (#5)
	Spacing	300 mm (12")	300 mm (12")	300 mm (12")	250 mm (10")	225 mm (9")	200 mm (8")	175 mm (7")	125 mm (5")	100 mm (4")
"L" Bars	Bar No	16M (#5)	16M (#5)	19M (#6)	19M (#6)	22M (#7)	22M (#7)	22M (#7)	22M (#7)	22M (#7)
	Number each wall	2	2	3	3	3	3	3	3	3

STATE OF CALIFORNIA
DEPARTMENT OF TRANSPORTATION

BOX CULVERT WINGWALLS TYPES D AND E

These "Standard Plans for Construction of Local Streets and Roads" contain units in two systems of measurement: International System of Units (SI or "metric") and United States Standard Measures shown in the parentheses (). The measurements expressed in the two systems are not necessarily equal or interchangeable. See the "Foreword" at the beginning of this publication.

NO SCALE

D85