| DIST | COUNTY | ROUTE | KILOMETER POST TOTAL PROJECT | SHEET NO. | TOTAL SHEETS |
|---|---|---|---|---|---|
| | | | | | |

REGISTERED CIVIL ENGINEER

July 1, 2002
PLANS APPROVAL DATE

REGISTERED PROFESSIONAL ENGINEER Glenn DeCou No. C34547 Exp. 9-30-03 CIVIL STATE OF CALIFORNIA

*The State of California or its officers or agents shall not be responsible for the accuracy or completeness of electronic copies of this plan sheet.*

*Caltrans now has a web site! To get to the web site, go to: http://www.dot.ca.gov*

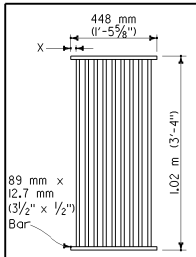


TYPE 450-9

35 mm (1 3/8") Clear spacing. Use within the roadbed on highways where bicycles and pedestrians are excluded.

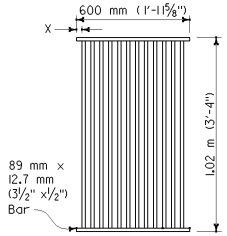


TYPE 600-9

51 mm (2") Clear spacing. Use in locations off the roadbed on all types of highways.

TYPE 600-12

35 mm (1 3/8") Clear spacing. Use within the roadbed on highways where bicycles and pedestrians are excluded.

## RECTANGULAR GRATE DETAILS

(See table below)

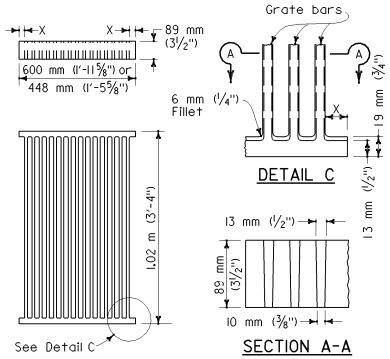


DETAIL C

SECTION A-A

## ALTERNATIVE CAST NODULAR IRON GRATE OR CAST STEEL GRATE

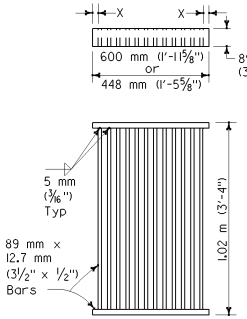


## ALTERNATIVE WELDED GRATE

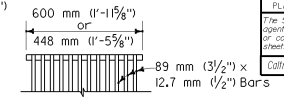


CAST END BLOCK

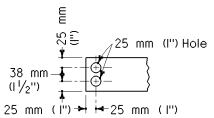


END OF BAR

## NOTES:

1. Grate type numbers refer to approximate width of grate in millimeters and number of bars, respectively.
2. Contractor has the option of using cast nodular iron, cast steel, welded, bolted, or cast end block grate.
3. See Special Provisions for requirements pertaining to galvanizing or asphalt dipping of grates and frames.
4. Rounded top of bars optional on all grates.
5. Pipe inlets with a grate shall be placed so that bars parallel direction of principle surface flow.
6. Full penetration butt welds may be substituted for the fillet welds on all anchors.
7. Standard square, hexagon, round or equivalent headed anchors may be substituted for the right angle hooks on the anchors shown on this plan.
8. Grate and frame weights are based on welded grates (weights of face angles, steps, protection bars, etc. are not included).

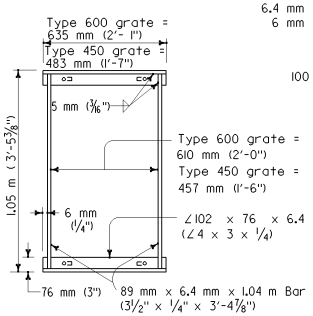


TYPICAL FRAME

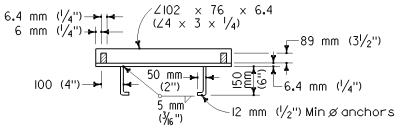


CROSS SECTION

(Thru frame)

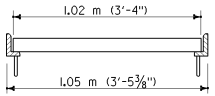


LONGITUDINAL SECTION

(Thru frame and grate)

## RECTANGULAR FRAME DETAILS

(For all rectangular grates)

## ALTERNATIVE CAST NODULAR IRON OR CAST STEEL END BLOCK GRATE

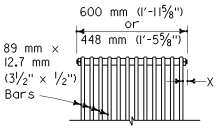


BOLTED END BLOCK

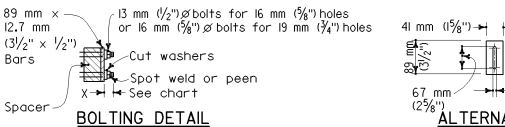


BOLTING DETAIL

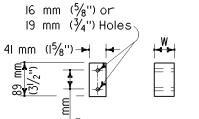


BAR SPACER

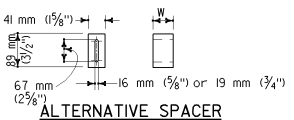


ALTERNATIVE SPACER

35 mm (1 3/8") or 50 mm (2")

## ALTERNATIVE BOLTED GRATE

GRATE BAR SPACING TABLE

| TYPE | NO. OF BARS | CLEAR BAR SPACING mm (in) | X mm (in) |
|---|---|---|---|
| 450-9 | 9 | 35 (1 3/8") | 27 (1 1/16") |
| 600-9 | 9 | 51 (2") | 40 (1 9/16") |
| 600-12 | 12 | 35 (1 3/8") | 32 (1 1/4") |

| INLET TYPE | COVER TYPE | MASS (WEIGHT) kg (LB) |
|---|---|---|
| OS | PLATE | 79 (174) |
| OL-2.1 m (7') | PLATE | 77 (170) |
| OL-3.0 m (10') | PLATE | 77 (170) |
| OL-4.3 m (14') | PLATE | 77 (170) |
| OL-6.4 m (21') | PLATE | 77 (170) |
| OCP | PLATE | 51 (112) |
| OCPI | PLATE | 51 (112) |
| OCPI | REDWOOD | 19 (42) |
| OMP | PLATE | 80 (177) |
| OMPI | PLATE | 80 (177) |

| INLET TYPE | GRATE TYPE | NO. OF GRATES | MASS (WEIGHT) kg (LB) |
|---|---|---|---|
| GDO | 600-12 | 2 | 288 (634) |
| | | | |
| | | | |
| GOL-2.1 m (7') | 600-12 | 1 | 148 (326) |
| | | | |
| | | | |
| GOL-3.0 m (10') | 600-12 | 1 | 148 (326) |
| | | | |
| | | | |
| GO,G1,G2,G3,G4(TYPE 600) | 600-9 | 1 | 119 (263) |
| | 600-12 | 1 | 148 (326) |
| | | | |
| | | | |
| G4(TYPE 450),G5,G6 | 450-9 | 1 | 113 (249) |
| GT1 | 450-9 | 2 | 226 (498) |
| GT2 | 450-9 | 2 | 226 (498) |
| GT3 | 600-12 | 2 | 296 (652) |
| | | | |
| | | | |
| GT4 | 600-12 | 2 | 296 (652) |
| | | | |
| | | | |
| | | | |
| | | | |
| TRASH RACK | | | 10 (22) |

## BASIS FOR MISC IRON & STEEL FINAL PAY MASSES FOR DRAINAGE INLETS

(See General Notes, No 8)

STATE OF CALIFORNIA
DEPARTMENT OF TRANSPORTATION

# GRATE DETAILS

These "Standard Plans for Construction of Local Streets and Roads" contain units in two systems of measurement: International System of Units (SI or "metric") and United States Standard Measures shown in the parentheses ( ). The measurements expressed in the two systems are not necessarily equal or interchangeable. See the "Foreword" at the beginning of this publication.

NO SCALE

**D77A**

2002 DUAL UNITS STD PLAN D77A