DIST	COUNTY	ROUTE	KILOMETER POST TOTAL PROJECT	SHEET NO.	TOTAL SHEETS

REGISTERED CIVIL ENGINEER

July 1, 2002
PLANS APPROVAL DATE

REGISTERED PROFESSIONAL ENGINEER
Jeff Sims
No. C40471
Exp. 6-30-03
CIVIL
STATE OF CALIFORNIA

The State of California or its officers or agents shall not be responsible for the accuracy or completeness of electronic copies of this plan sheet.

Caltrans now has a web site! To get to the web site, go to: http://www.dot.ca.gov

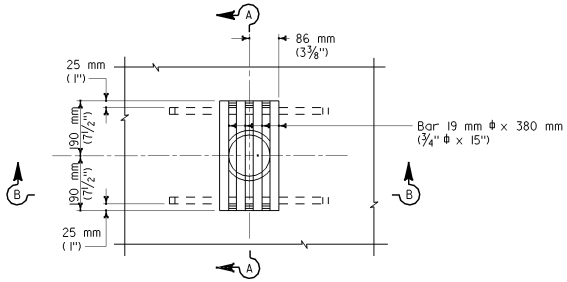

PLAN

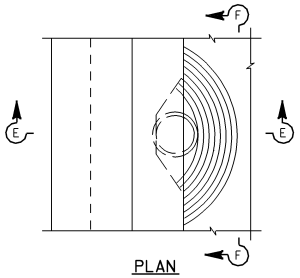

PLAN

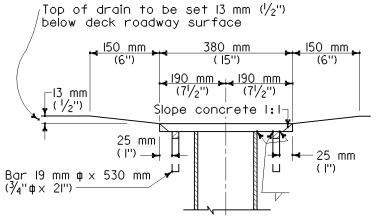

SECTION A-A

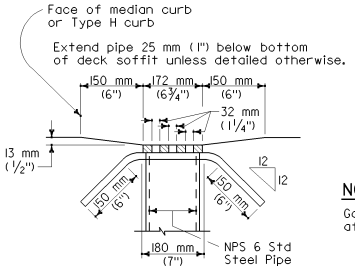

SECTION B-B

NOTE

Galvanize drain after fabrication

DRAIN - TYPE "A" DETAIL 7-1

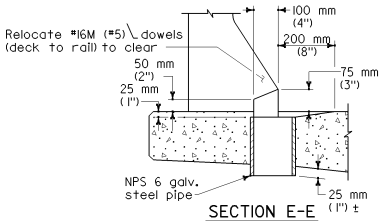

SECTION E-E

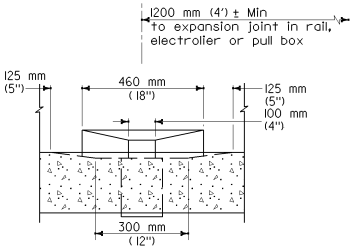

SECTION F-F

DRAIN - TYPE "B" DETAIL 7-3

For Type 25 barrier railing

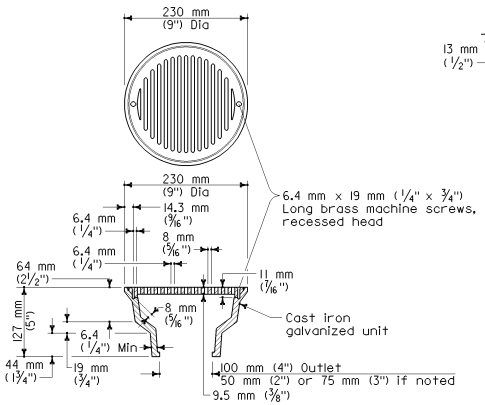

AREA DRAIN DETAIL 7-4

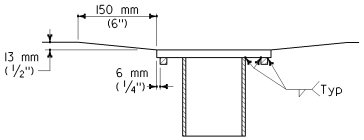

SECTION G-G

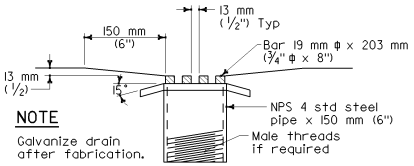

NOTE

Galvanize drain after fabrication.

SECTION H-H

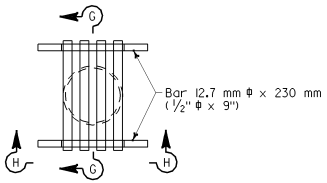

PLAN

PEDESTRIAN STRUCTURE DRAIN DETAIL 7-5

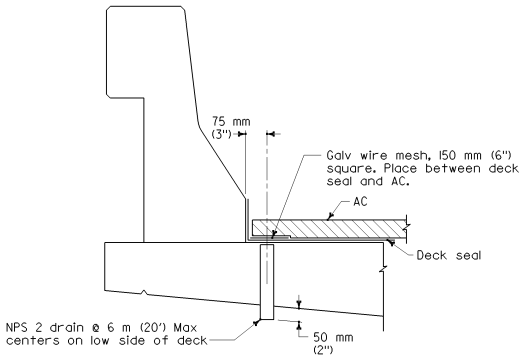

DECK BLEEDER DRAIN DETAIL 7-6

STATE OF CALIFORNIA
DEPARTMENT OF TRANSPORTATION

DECK DRAINS

These "Standard Plans for Construction of Local Streets and Roads" contain units in two systems of measurement: International System of Units (SI or "metric") and United States Standard Measures shown in the parentheses (). The measurements expressed in the two systems are not necessarily equal or interchangeable. See the "Foreword" at the beginning of this publication.

NO SCALE

B7-5

2002 DUAL UNITS STD PLAN B7-5