DIST	COUNTY	ROUTE	KILOMETER POST TOTAL PROJECT	SHEET NO.	TOTAL SHEETS

Daniel T. Adams
REGISTERED CIVIL ENGINEER

July 1, 2002
PLANS APPROVAL DATE

REGISTERED PROFESSIONAL ENGINEER
Daniel T. Adams
No. C46476
Exp. 6-30-03
CIVIL
STATE OF CALIFORNIA

The State of California or its officers or agents shall not be responsible for the accuracy or completeness of electronic copies of this plan sheet.

Caltrans now has a web site! To get to the web site, go to: http://www.dot.ca.gov

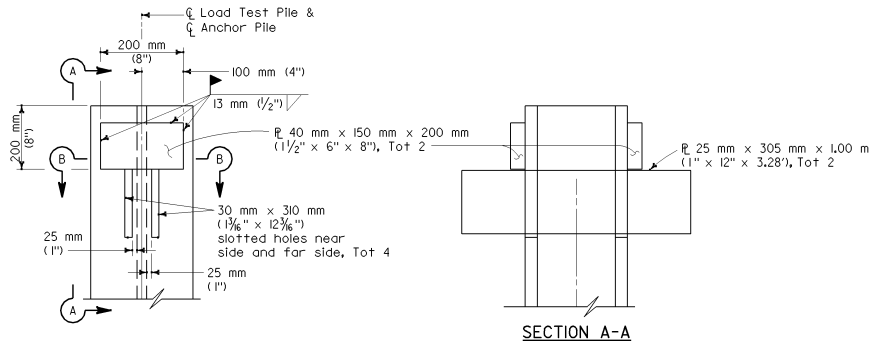

SECTION A-A

Maximum Tensile Test Force Per Pile : HP 250 (10) x 62 (42) = 800 kN (180 kips)
HP 250 (10) x 85 (57) = 1090 kN (245 kips)
HP 360 (14) x 132 (89) = 1350 kN (300 kips)

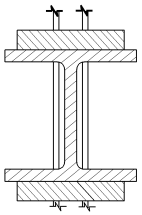

SECTION B-B

STEEL H-PILE DETAILS

NOTE:

Alignment of slots and 40 mm (1 1/2") ℞ 's shall permit a ℞ 25 mm x 305 mm x 1.00 m (1" X 12" X 3.28 ') to pass through pile parallel to ℄ web of pile and achieve a snug fit. Details applicable for load test and anchor piles. Slots to be cut after piles are driven.

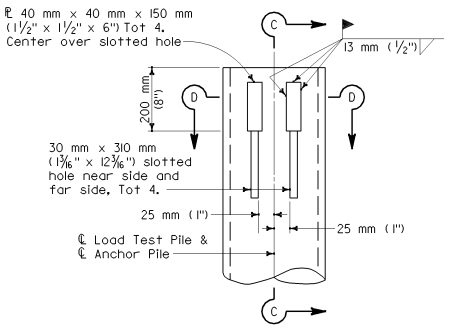

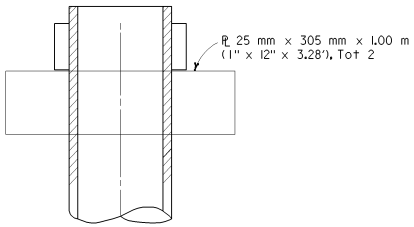

SECTION C-C

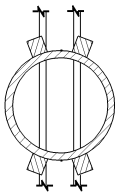

SECTION D-D

Maximum Tensile Test Force Per Pile : Class 400 (45) [PP 360 x 9.53 (14 x 0.375)] = 800 kN (80 kips)
Class 625 (70) [PP 360 x 11.12 (14 x 0.438)] = 1245 kN (280 kips)
Class 900 (100) [PP 406 x 12.70 (16 x 0.50)] = 1350 kN (300 kips)

ALTERNATIVE "W" STEEL PIPE - PILE DETAILS

NOTE:

Alignment of slots and 40 mm (1 1/2") ℞ 's shall permit a ℞ 25 mm x 305 mm x 1.00 m (1" X 12" X 3.28 ') to pass through pile. Details applicable for load test and anchor piles. Slots to be cut after piles are driven.

STATE OF CALIFORNIA
DEPARTMENT OF TRANSPORTATION

LOAD TEST PILE DETAILS (3)

These "Standard Plans for Construction of Local Streets and Roads" contain units in two systems of measurement: International System of Units (SI or "metric") and United States Standard Measures shown in the parentheses ( ). The measurements expressed in the two systems are not necessarily equal or interchangeable. See the "Foreword" at the beginning of this publication.

NO SCALE

B2-11

2002 DUAL UNITS STD PLAN B2-11