DIST	COUNTY	ROUTE	POST MILES TOTAL PROJECT	SHEET NO.	TOTAL SHEETS

REGISTERED CIVIL ENGINEER — DATE

July 1, 2002
PLANS APPROVAL DATE

REGISTERED PROFESSIONAL ENGINEER — Donald E. Howe — No. 46402 — Exp. 3-31-03 — CIVIL — STATE OF CALIFORNIA

The State of California or its officers or agents shall not be responsible for the accuracy or completeness of electronic copies of this plan sheet.

Caltrans now has a web site! To get to the web site, go to: http://www.dot.ca.gov

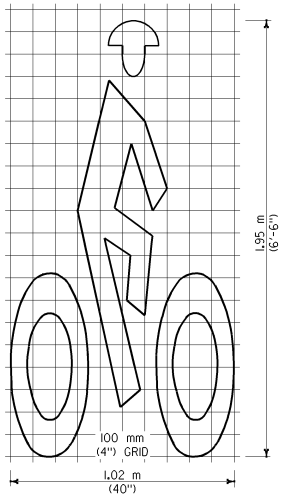

A=0.65 m^2 (7 SQFT)

BIKE LANE SYMBOL

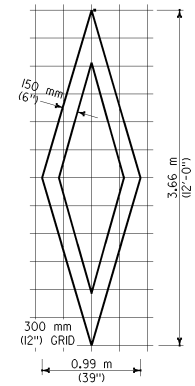

A=1.02 m^2 (11 SQFT)

DIAMOND SYMBOL

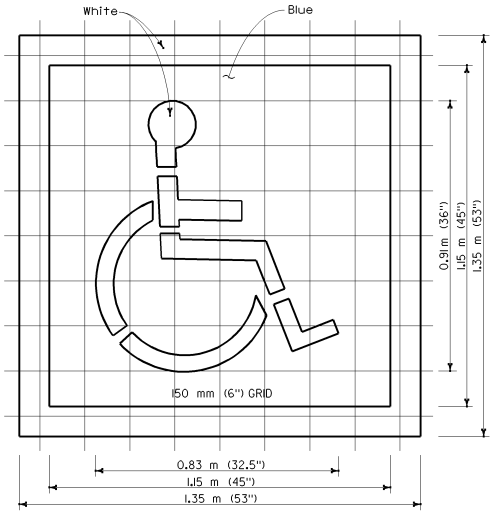

A (Blue) =1.32 m^2 (14 SQFT)

A (White) =0.82 m^2 (9 SQFT)

DISABLED PERSONS PARKING SYMBOL

See Note 2

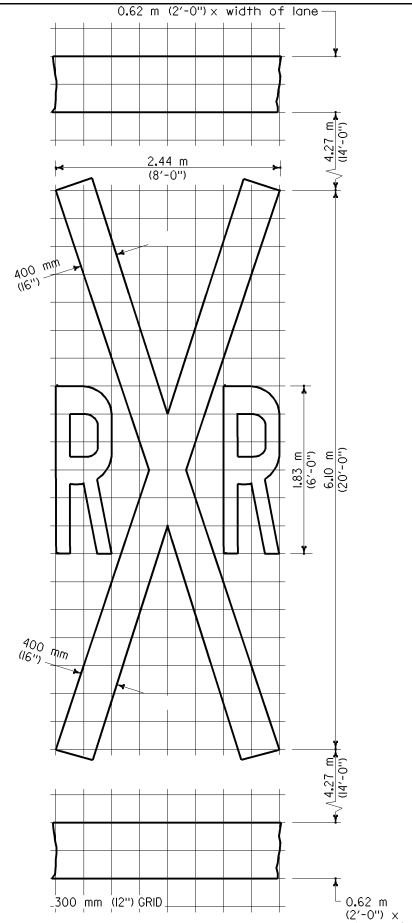

A=6.50 m^2 (70 SQFT)*

RAILROAD CROSSING SYMBOL

*6.5 m^2 (70 SQFT) DOES NOT INCLUDE THE 0.6 m (2'-0") x VARIABLE WIDTH TRANSVERSE LINES.

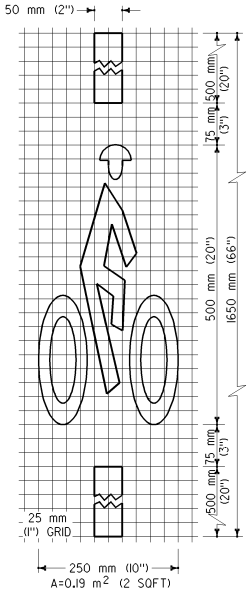

A=0.19 m^2 (2 SQFT)

BICYCLE LOOP DETECTOR SYMBOL

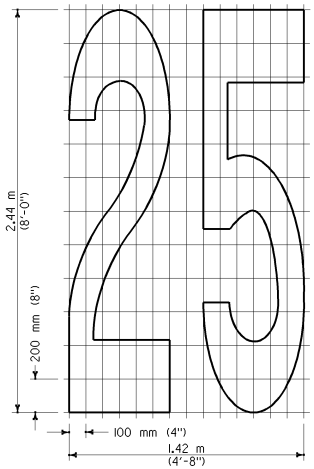

A=1.63 m^2 (17.5 SQFT)

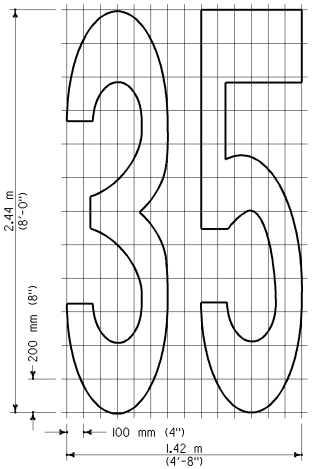

A=1.53 m^2 (16.5 SQFT)

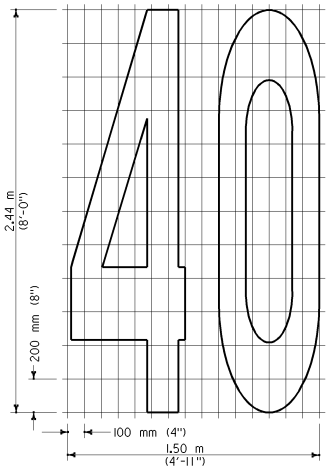

A=1.8 m^2 (19.5 SQFT)

NUMERALS

NOTES

1. Minor variations in dimensions may be accepted by the Engineer.
2. This parking symbol is also known as the International Symbol of Accessibility (ISA)

STATE OF CALIFORNIA
DEPARTMENT OF TRANSPORTATION

PAVEMENT MARKINGS SYMBOLS AND NUMERALS

These "Standard Plans for Construction of Local Streets and Roads" contain units in two systems of measurement: International System of Units (SI or "metric") and United States Standard Measures shown in the parentheses (). The measurements expressed in the two systems are not necessarily equal or interchangeable. See the "Foreword" at the beginning of this publication.

NO SCALE

A24C