Dist	COUNTY	ROUTE	POST MILES TOTAL PROJECT	SHEET No.	TOTAL SHEETS

REGISTERED CIVIL ENGINEER

May 20, 2011

PLANS APPROVAL DATE

REGISTERED PROFESSIONAL ENGINEER Dallas Forester No. C37765 Exp. 12-31-12 CIVIL STATE OF CALIFORNIA

THE STATE OF CALIFORNIA OR ITS OFFICERS OR AGENTS SHALL NOT BE RESPONSIBLE FOR THE ACCURACY OR COMPLETENESS OF SCANNED COPIES OF THIS PLAN SHEET.

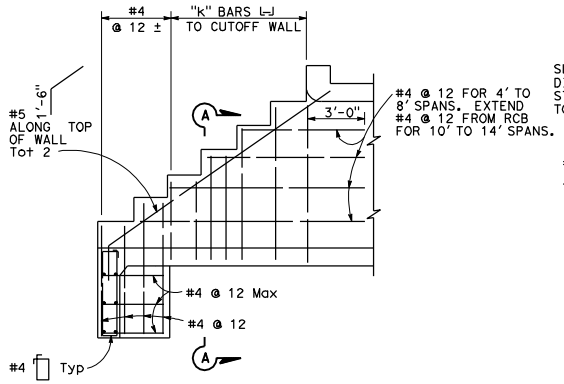

LONGITUDINAL SECTION

Showing reinforcement in outside face

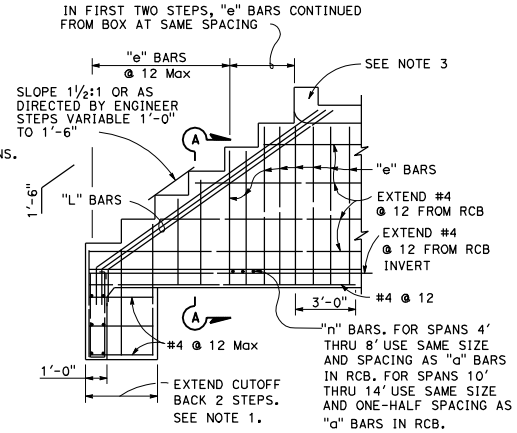

LONGITUDINAL SECTION

Showing reinforcement in inside face

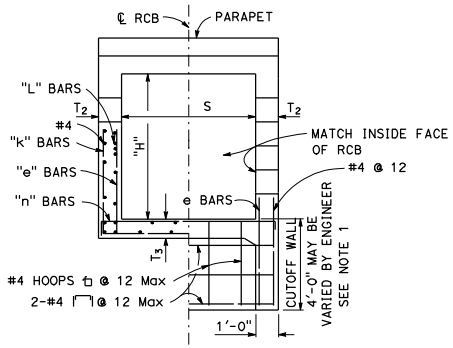

HALF SECTION A-A END ELEVATION

Dimensions S and T_3 to be same as adjacent RCB.

T_2 = Same as adjacent RCB (8" Min).

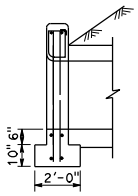

SECTION B-B

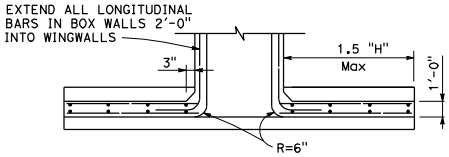

SECTION C-C

TYPE "E" STEPPED WINGWALL (SINGLE BOX CULVERT)

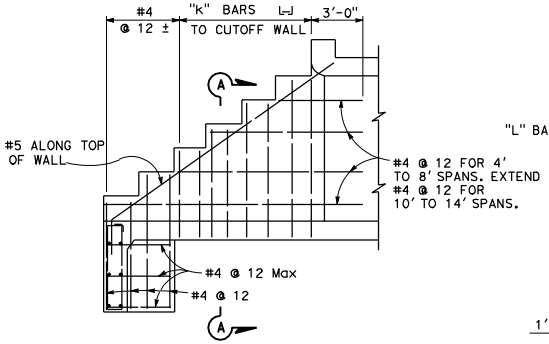

LONGITUDINAL SECTION

Showing reinforcement in outside face

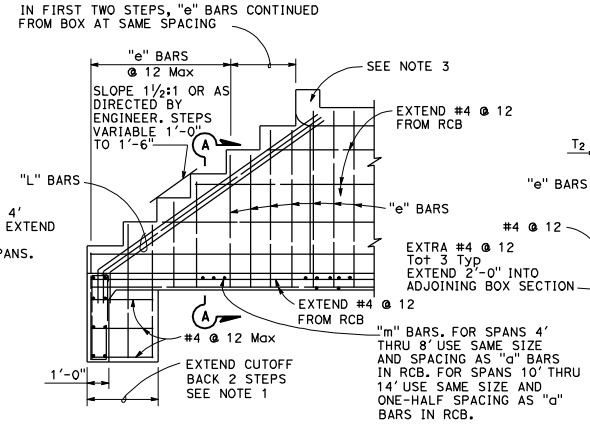

LONGITUDINAL SECTION

Showing reinforcement in inside face

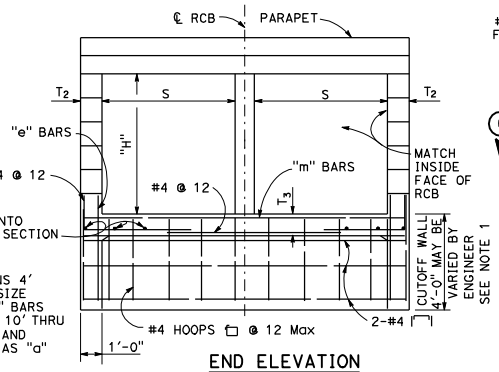

END ELEVATION

Dimensions S and T_3 to be same as adjacent RCB.

T_2 = Same as adjacent RCB (8" Min).

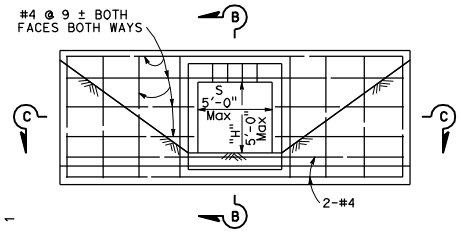

ELEVATION

TYPE "D" STRAIGHT WINGWALL

Details similar for multiple span boxes. See Note 3.

TYPE "E" STEPPED WINGWALL (MULTIPLE BOX CULVERT)

TABLE OF REINFORCEMENT FOR TYPE "E" WINGWALLS										
"H"	(SEE NOTE 2)	3'	4'	5'	6'	7'	8'	10'	12'	14'
"k" BARS	BAR No.	#4	#4	#5	#5	#5	#5	#5	#5	#5
	SPACING	@ 12	@ 12	@ 12	@ 10	@ 9	@ 8	@ 7	@ 5	@ 4
"L" BARS	BAR No.	#5	#5	#6	#6	#7	#7	#7	#7	#7
	NUMBER EACH WALL	2	2	3	3	3	3	3	3	3

NOTES:

1. Eliminate cutoff walls if adjacent channel is paved.
2. For "H" not shown use reinforcement for next greater height.
3. For parapet details not shown see Standard Plan D82.

DETAIL OF DESIGN LOADING CASES - TYPE "D" STRAIGHT WINGWALL

Case I Level + 240 psf surcharge
Case II 2:1 sloping ground with no surcharge
Case III 1½:1 limited slope (5'-0" Max height) + 240 psf surcharge

STATE OF CALIFORNIA
DEPARTMENT OF TRANSPORTATION

BOX CULVERT WINGWALLS TYPES D AND E

NO SCALE

D85

2010 STANDARD PLAN D85

9-21-10