Dist	COUNTY	ROUTE	POST MILES TOTAL PROJECT	SHEET No.	TOTAL SHEETS

REGISTERED CIVIL ENGINEER

May 20, 2011

PLANS APPROVAL DATE

Glenn DeCou No. C34547 Exp. 9-30-11 CIVIL STATE OF CALIFORNIA REGISTERED PROFESSIONAL ENGINEER

THE STATE OF CALIFORNIA OR ITS OFFICERS OR AGENTS SHALL NOT BE RESPONSIBLE FOR THE ACCURACY OR COMPLETENESS OF SCANNED COPIES OF THIS PLAN SHEET.

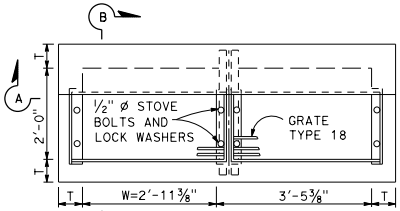

PLAN

TYPE GT1

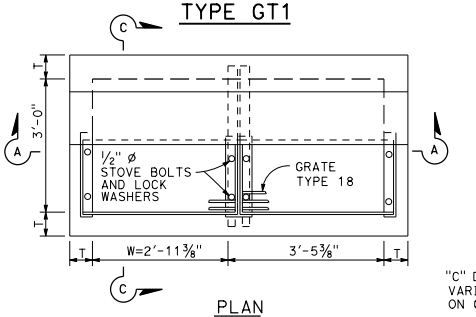

PLAN

TYPE GT2

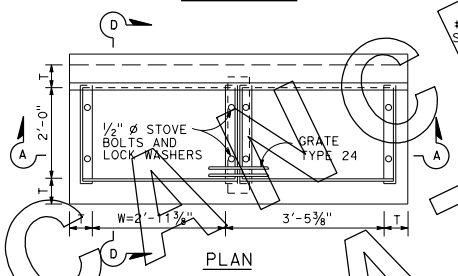

PLAN

TYPE GT3

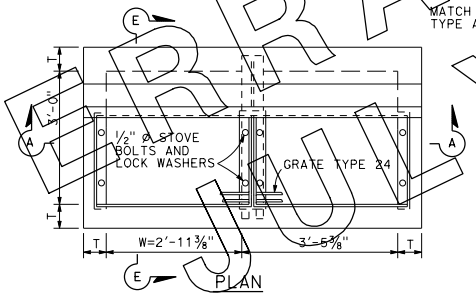

PLAN

TYPE GT4

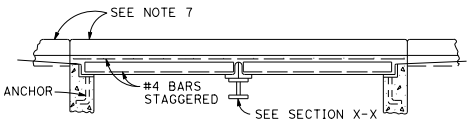

SECTION A-A

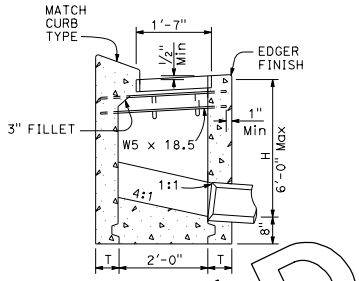

SECTION B-B

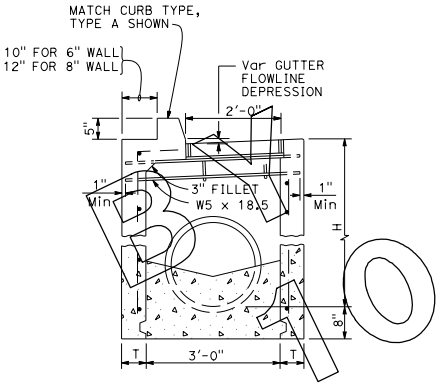

SECTION E-E

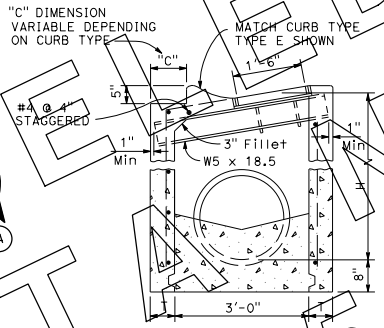

SECTION C-C

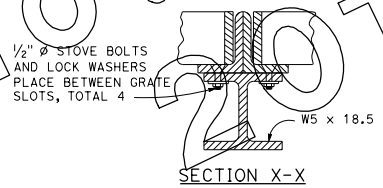

SECTION X-X

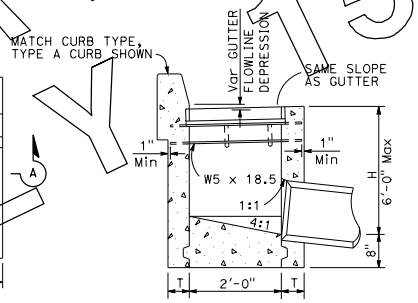

SECTION D-D

NOTES:

1. "H" is the difference in elevation between the outlet pipe flow line and the normal gutter grade line undepressed.
2. For "T" wall thickness, see Table A below.
3. Wall reinforcing not required when "H" is 8'-0" or less and the unsupported width or length is 7'-0" or less. Walls exceeding these limits shall be reinforced with #4 bars @ 1'-6" ± centers placed 1½" clear to inside of box unless otherwise shown.
4. Inlet bottom reinforcing not required. See Standard Plan D74C for alternative reinforced bottom.
5. Steps - None required where "H" is less than 2'-6". Where "H" is 2'-6" or more, install steps with lowest rung 1'-0" above the floor and highest rung not more than 6" below top of inlet. The distance between steps shall not exceed 1'-0" and shall be uniform throughout the length of the wall. Place steps in the wall without an opening. Step inserts may be substituted for the bar steps. Step Inserts shall comply with State Industrial Safety requirement. See Standard Plan D74C for step details.
6. Pipe(s) can be placed in any wall.
7. Curb section shall match adjacent curb.
8. Basin floors shall have wood trowel finish and a minimum slope of 4:1 from all directions toward outlet pipe.
9. W = 2'-11⅜" for one grate. Add 3'-5⅜" for additional grates in tandem.
10. See Standard Plans D77A and D77B for grate and frame details and weights of miscellaneous iron and steel.
11. See Standard Plan D78A for gutter depression details.
12. Complete joint penetration butt welds may be substituted for the fillet welds on all anchors.
13. Standard square, hexagon, round or equivalent headed anchors may be substituted for the right angle hooks on the anchors shown on this plan.
14. Cast-in-place inlets to be formed around all pipes/stubs intersecting the inlet and concrete poured in one continuous operation. Precast inlets shall have mortared pipe connections conforming to details for Type GCP inlet on Standard Plan D75B. See Standard Specifications for mortar composition.

TABLE A

CONCRETE QUANTITIES

TYPE	H=3'-0" TO 8'-0" (T=6")		H=8'-1" TO 20'-0" (T=8")	
	H=3'-0" CY	ADDITIONAL PCC PER FOOT CY	H=8'-1"	ADDITIONAL PCC PER FOOT CY
GT1	1.74	0.348	SEE NOTE A	SEE NOTE A
GT2	2.11	0.385	5.40	0.530
GT3	1.73	0.348	SEE NOTE A	SEE NOTE A
GT4	2.18	0.385	5.41	0.530

TABLE BASED ON 8" FLOOR SLAB, NO DEDUCTION FOR PIPE OPENINGS, AND CURB TYPE GIVING HIGHEST QUANTITY OF CONCRETE. NO DEDUCTIONS OR ADJUSTMENTS ARE TO BE MADE TO THESE QUANTITIES BECAUSE OF PIPE OPENINGS, DIFFERENT FLOOR ALTERNATIVES OR DIFFERENT CURB TYPE.

NOTE A: Maximum allowable height = 6'-0".

STATE OF CALIFORNIA
DEPARTMENT OF TRANSPORTATION

DRAINAGE INLETS

NO SCALE

D74A

2010 STANDARD PLAN D74A

CHANGE ORDER NO. 2 ERRATA JULY 15, 2010

6-9-09