| DIST | COUNTY | ROUTE | POST MILES TOTAL PROJECT | SHEET NO. | TOTAL SHEETS |
|---|---|---|---|---|---|
| | | | | | |

REGISTERED CIVIL ENGINEER

May 1, 2006

PLANS APPROVAL DATE

REGISTERED PROFESSIONAL ENGINEER Jeffrey B. Woody No. C41260 Exp. 3-31-07 CIVIL STATE OF CALIFORNIA

*The State of California or its officers or agents shall not be responsible for the accuracy or completeness of electronic copies of this plan sheet.*

*To get to the Caltrans web site, go to: http://www.dot.ca.gov*

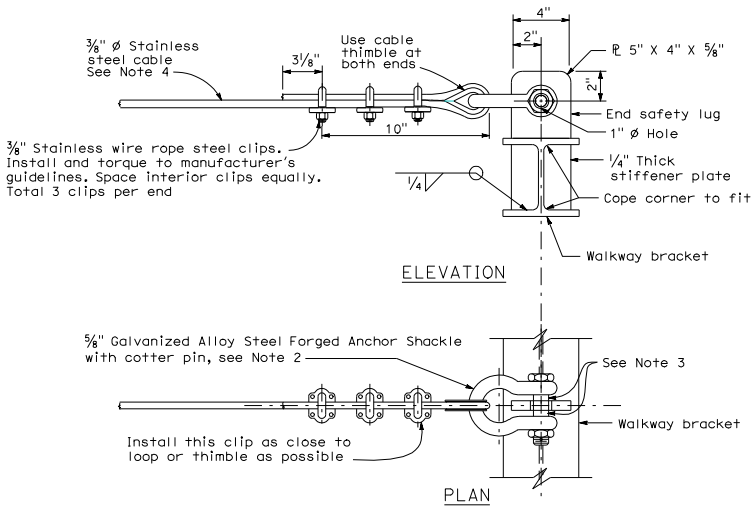


END SAFETY CABLE DETAIL

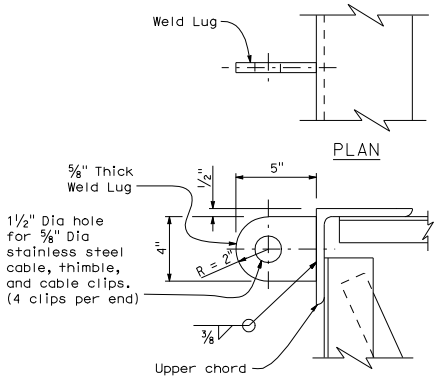


ELEVATION

BACKSIDE WELD LUG

NOTE: Backside weld lug shall be installed only for projects requiring backside walkways.

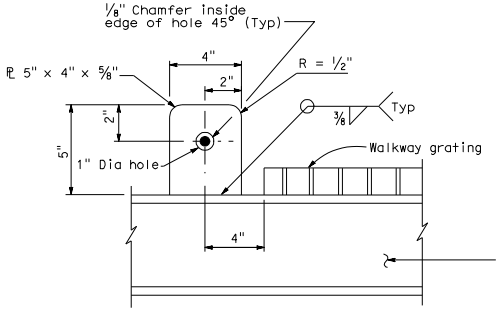


INTERIOR SAFETY LUG DETAIL

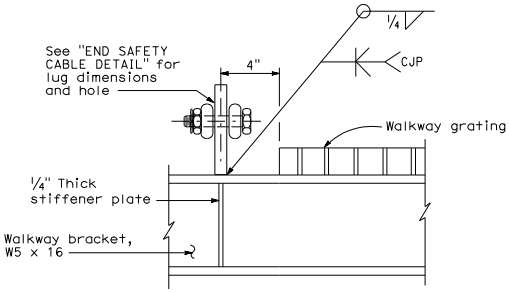


END SAFETY LUG DETAIL

NOTES:

1. Stainless steel cable shall be plain with 7 x 19 Class Strand Core construction using Type 302 or 304 alloy stainless steel strands. Minimun cable breaking strength shall be 10,000 pounds. Cable shall be free of kinks, knots, or deformation and shall be continuous between end lugs. Splices not allowed. Safety cable shall not be prestrected.
2. Shackle shall have a minimum working load limit of 10,000 pounds.
3. Place an equal amount of washers on each side to align cable with end lug without restricting shakle bolt rotation or contacting cable.
4. Prior to tightening cable clips at end anchorage, slack in cable shall be removed by the full effort of a typical construction worker.
5. For walkway grating details, see Standard Plans S114 or S133.

STATE OF CALIFORNIA
DEPARTMENT OF TRANSPORTATION

# OVERHEAD SIGN-TRUSS SINGLE POST TYPE SAFETY CABLE ANCHORAGE DETAILS CHANGEABLE MESSAGE SIGNS MODEL 500 AND 510

NO SCALE

**S141**

1-4-06

**2006 STANDARD PLAN S141**