DIST	COUNTY	ROUTE	POST MILES TOTAL PROJECT	SHEET NO.	TOTAL SHEETS

REGISTERED CIVIL ENGINEER

May 1, 2006

PLANS APPROVAL DATE

REGISTERED PROFESSIONAL ENGINEER Jeffrey B. Woody No. C41260 Exp. 3-31-07 CIVIL STATE OF CALIFORNIA

The State of California or its officers or agents shall not be responsible for the accuracy or completeness of electronic copies of this plan sheet.

To get to the Caltrans web site, go to: http://www.dot.ca.gov

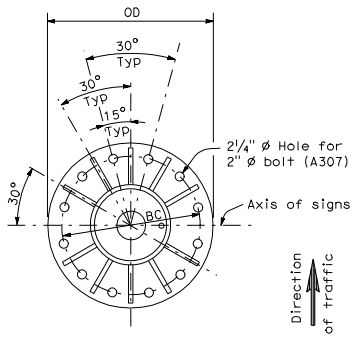

12 BOLT

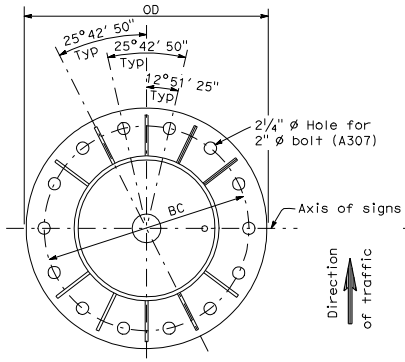

14 BOLT

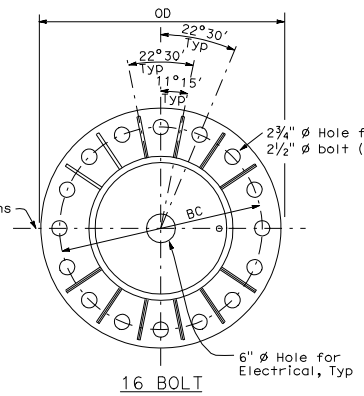

16 BOLT

BC = Bolt Circle Diameter

BASE PLATE DETAILS SINGLE POST TYPE

SINGLE POST TRUSS

Post Type No.	Pipe		Base ℄ OD and Thickness	Anchor Bolts	
	NPS	Thickness		Bolt Circle Dia	Bolt Totals and Dia of Bolt
II	14	½"	2′-10" x 2"	2′-0"	12-2"
III	16		2′-10" x 2"	2′-0"	12-2"
IV	18		2′-10" x 2"	2′-0"	12-2"
V	20		3′-4" x 2½"	2′-10"	14-2"
VI	24		3′-4" x 2½"		16-2½"
VII	24	¾"	3′-4" x 2½"		
VIII	24	31/32"	3′-4" x 3½"		
IX	24	31/32"	3′-4" x 3½"		

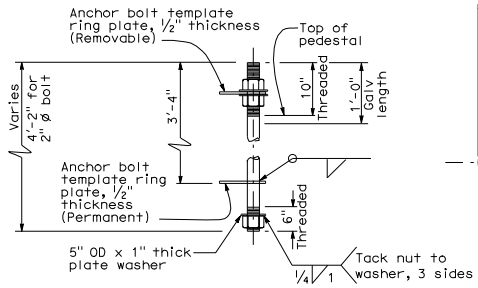

FOR POST II THRU IV
12 BOLT PATTERN

ANCHOR BOLT TEMPLATE ASSEMBLY

NOTE: One bolt shown only. Other bolts same configuration around ring plate.

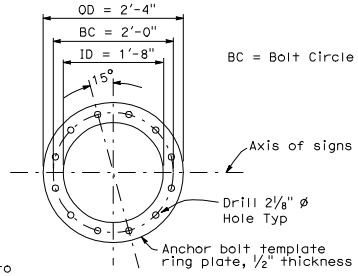

BC = Bolt Circle Diameter

12 BOLT

ANCHOR BOLT TEMPLATE

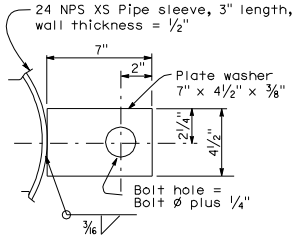

PLATE WASHER DETAIL FOR 14 AND 16 BOLT TEMPLATE PATTERN

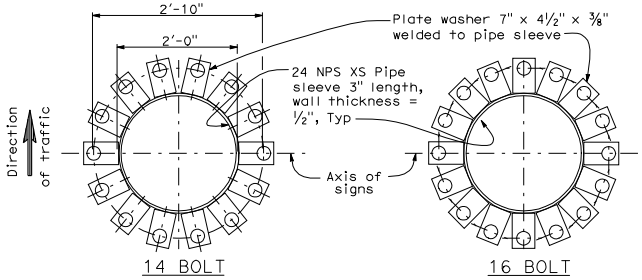

14 BOLT 16 BOLT

ANCHOR BOLT TEMPLATE

Template to match base plate anchor bolt pattern. (Option: Template similar to ring plate type can be used in lieu of plate washer type).

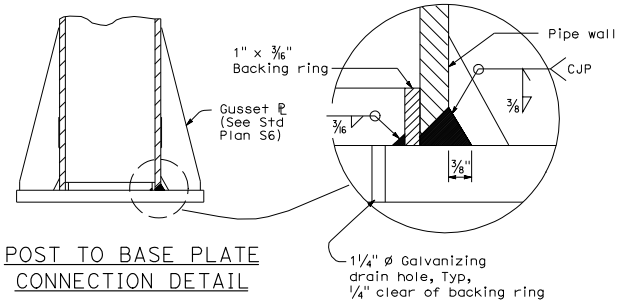

POST TO BASE PLATE CONNECTION DETAIL

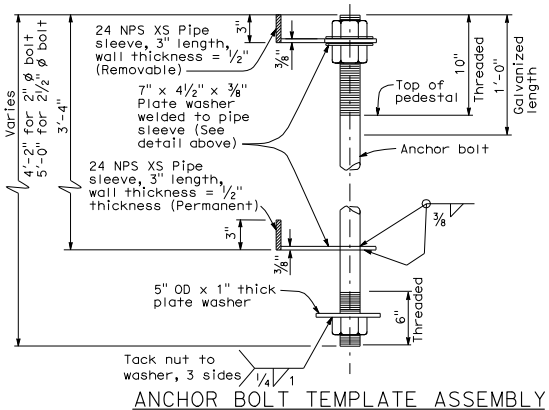

ANCHOR BOLT TEMPLATE ASSEMBLY FOR 14 AND 16 BOLT PATTERN

NOTE: One bolt shown only. Other bolts same configuration around pipe sleeve.

STATE OF CALIFORNIA
DEPARTMENT OF TRANSPORTATION

OVERHEAD SIGNS-TRUSS SINGLE POST TYPE BASE PLATE AND ANCHORAGE DETAILS

NO SCALE

S3

1-4-06