Pole Type	Pole Data				Base Plate Data (mm)					CIDH Pile Data		
	Height "h"	Min OD		Min Thickness	Dia	Thickness	Anchor Bolts			"D"	"L"	Pile Reinf
		BASE	TOP				Total	Size "d"	BC			
CCTV 90	90′	24"	11 1/16"	0.1793" *	36"	2"	6	2"	29"	3′-6"	12′	15 - #7
CCTV 80	80′	22"	10 7/16"	0.1793" *	34"	2"	6	2"	27"	3′-6"	11′	15 - #7
CCTV 70	70′	20"	10 1/4"	0.1793"	32"	2"	6	2"	25"	3′-6"	10′	15 - #7
CCTV 60	60′	18"	9 3/4"	0.1793"	30"	2"	6	2"	23"	3′-6"	9′	15 - #7

* Lower pole segment thickness, see Pole Details

DIST	COUNTY	ROUTE	POST MILES TOTAL PROJECT	SHEET NO.	TOTAL SHEETS

REGISTERED CIVIL ENGINEER

May 1, 2006

PLANS APPROVAL DATE

REGISTERED PROFESSIONAL ENGINEER Jeffrey B. Woody No. C41260 Exp. 3-31-07 CIVIL STATE OF CALIFORNIA

The State of California or its officers or agents shall not be responsible for the accuracy or completeness of electronic copies of this plan sheet.

To get to the Caltrans web site, go to: http://www.dot.ca.gov

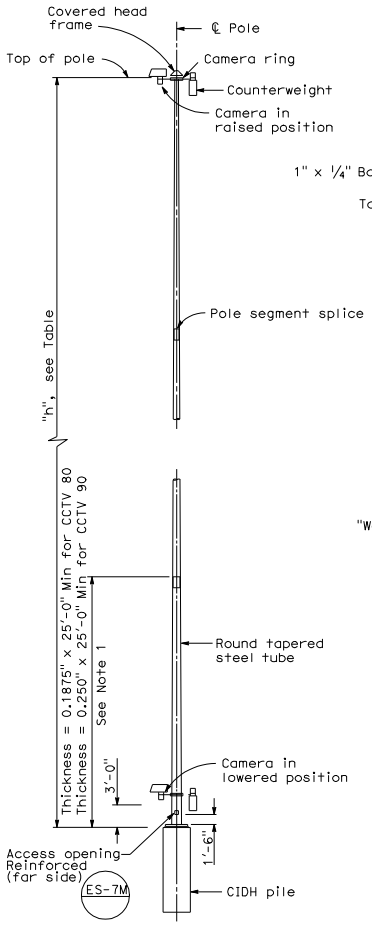

POLE DETAILS

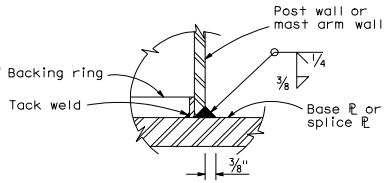

WELD DETAIL

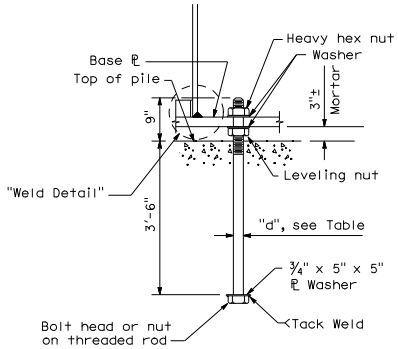

ANCHOR BOLT DETAIL

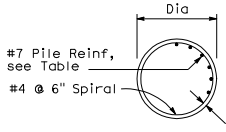

SECTION A-A

CIDH PILE DETAILS

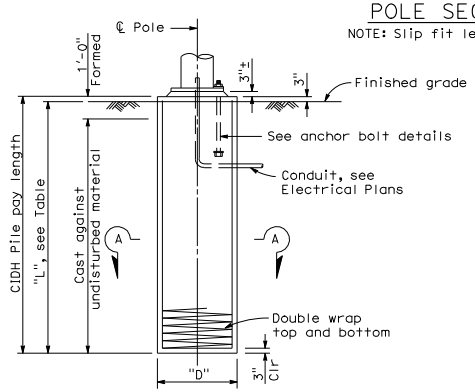

TYPICAL ELEVATION

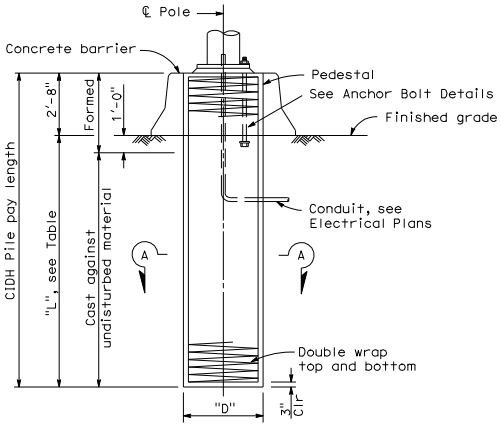

MEDIAN LOCATION

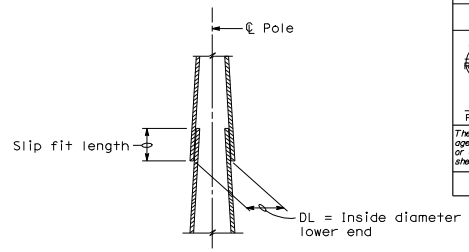

POLE SEGMENT SPLICE DETAIL

NOTE: Slip fit length shall not be less than 1.5 DL.

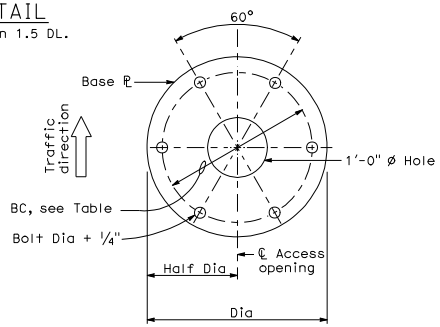

BASE PLATE DETAILS

GENERAL NOTES:

SPECIFICATIONS

Design : AASHTO Standard specifications for structural supports for highway signs, luminaires and traffic signals dated 2001.

LOADING

Wind Loadings : 80 mph

UNIT STRESSES

Structural Steel: f_s Maximum allowed for design of tapered steel tube (pole) to be 55,000 psi.

NOTES:

1. Pole details shall suit the lowering device and this foundation plan. Pole details shall be submitted to the Engineer for approval.
2. Pole finishes shall be galvanized.
3. For camera details, see Electrical Plans.
4. Foundation design is based on a maximum wind velocity of 80 mph.

STATE OF CALIFORNIA
DEPARTMENT OF TRANSPORTATION

ELECTRICAL SYSTEMS (CLOSED CIRCUIT TELEVISION 60' TO 90' HIGH MAST POLE DETAILS)

NO SCALE

ES-16C

1-4-06

2006 STANDARD PLAN ES-16C