DIST	COUNTY	ROUTE	POST MILES TOTAL PROJECT	SHEET NO.	TOTAL SHEETS

REGISTERED CIVIL ENGINEER

May 1, 2006

PLANS APPROVAL DATE

REGISTERED PROFESSIONAL ENGINEER Jeffrey B. Woody No. C41260 Exp. 3-31-07 CIVIL STATE OF CALIFORNIA

The State of California or its officers or agents shall not be responsible for the accuracy or completeness of electronic copies of this plan sheet.

To get to the Caltrans web site, go to: http://www.dot.ca.gov

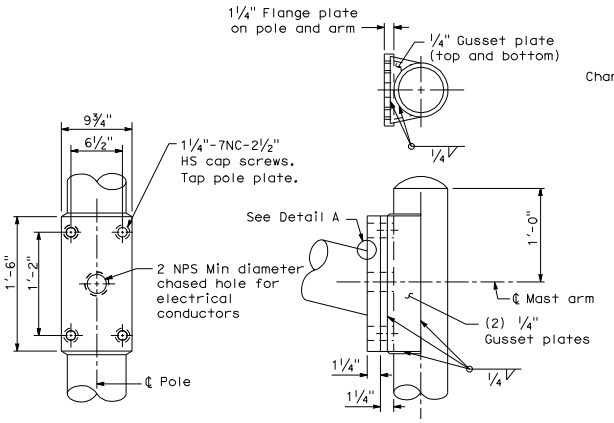

MAST ARM CONNECTION DETAILS

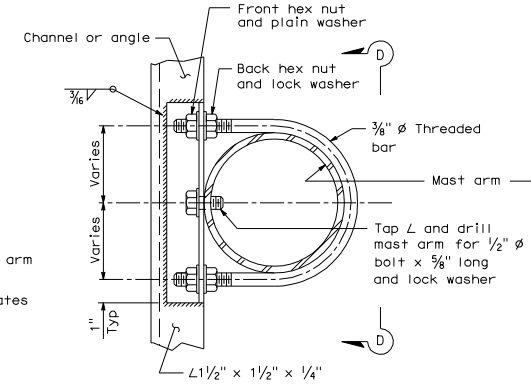

NOTE:

Tighten front hex nuts first, then tighten back hex nuts.

NOTE:

Lighting details not shown see Note 5 on Standard Plan ES-7K. Mounting to channel shown, mounting to angle similar.

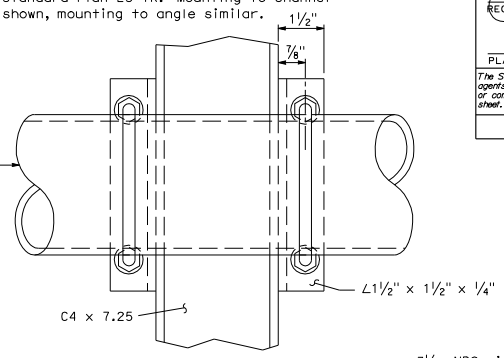

VIEW D-D

SIGN FRAME MOUNTING DETAILS

All types

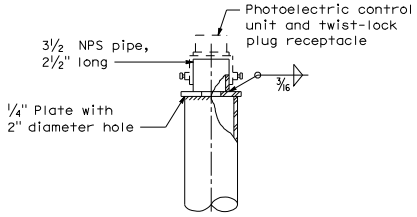

POLE TOP DETAIL

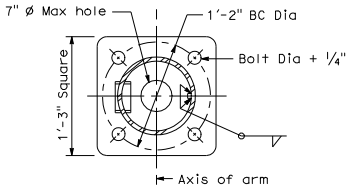

PLAN

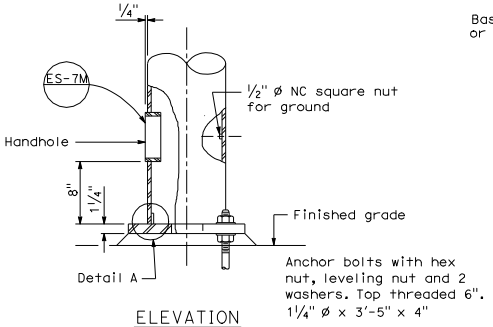

ELEVATION

BASE PLATE AND ANCHORAGE DETAILS

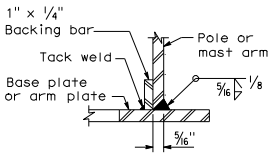

DETAIL A

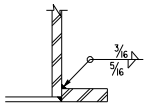

ALTERNATIVE DETAIL A

For pole-base plate only.

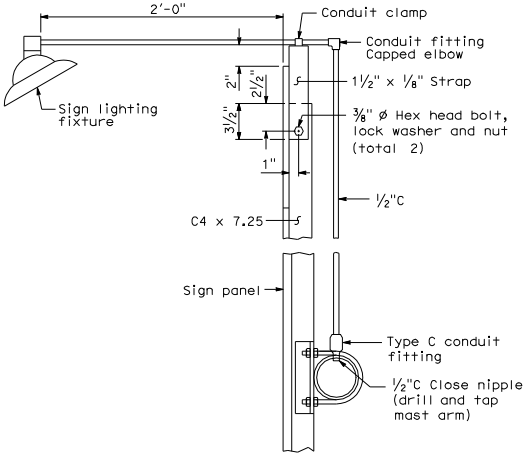

SIGN LIGHTING FIXTURE TYPES 9A AND 9B

See Note 4 on Standard Plan ES-7K.

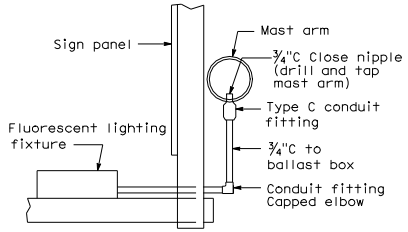

SIGN LIGHTING FIXTURE TYPE 9 FRAME

STATE OF CALIFORNIA
DEPARTMENT OF TRANSPORTATION

ELECTRICAL SYSTEMS (SIGNAL AND LIGHTING STANDARDS CANTILEVER FLASHING BEACON TYPES 9, 9A AND 9B)

NO SCALE

ES-7L

1-4-06

2006 STANDARD PLAN ES-7L