DIST	COUNTY	ROUTE	POST MILES TOTAL PROJECT	SHEET NO.	TOTAL SHEETS

REGISTERED CIVIL ENGINEER

May 1, 2006

PLANS APPROVAL DATE

REGISTERED PROFESSIONAL ENGINEER Jeffrey B. Woody No. C41260 Exp. 3-31-07 CIVIL STATE OF CALIFORNIA

The State of California or its officers or agents shall not be responsible for the accuracy or completeness of electronic copies of this plan sheet.

To get to the Caltrans web site, go to: http://www.dot.ca.gov

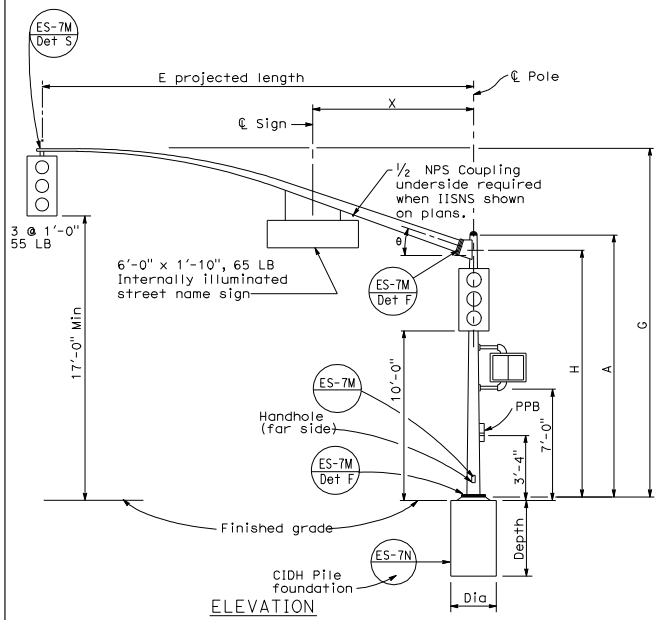

ELEVATION

TYPE 16-2-100, 18-2-100

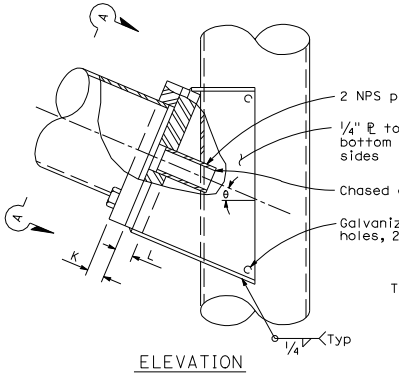

ELEVATION

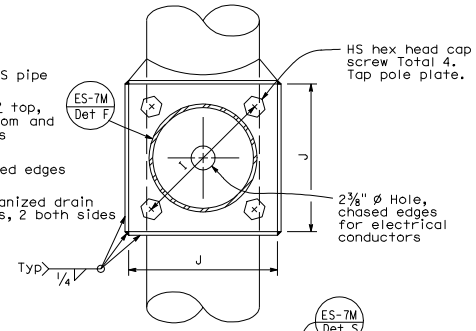

VIEW A-A

SIGNAL ARM CONNECTION DETAILS

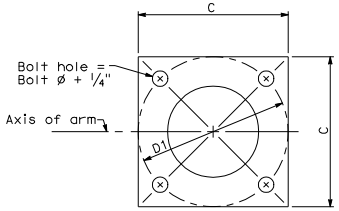

BASE PLATE

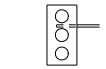

Required for Type 17-2-100 Type 17A-2-100

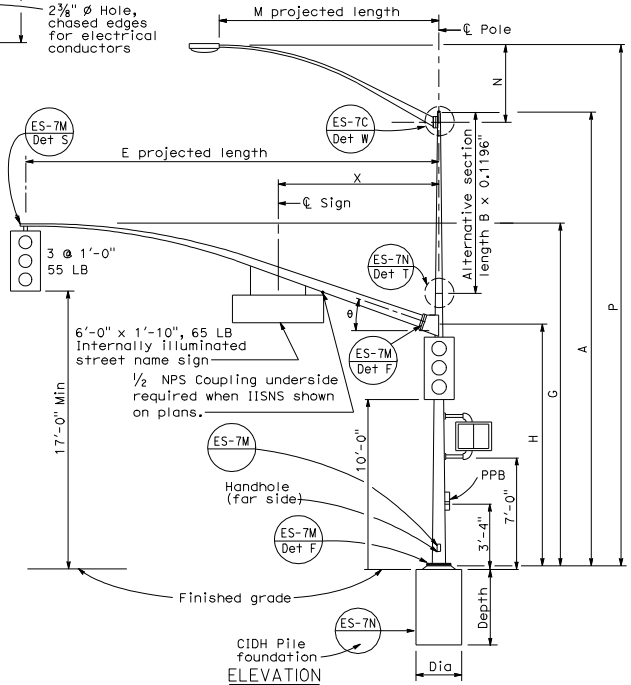

ELEVATION

TYPE 17-2-100, 19-2-100, 17A-2-100, 19A-2-100

SIGNAL ARM DATA											
E Projected Length	G Mounting Height	H	Min OD At Pole	Thickness	I Bolt Circle	HS Cap Screws	J Plate Size	K Arm ℄ Thickness	L Pole ℄ Thickness	θ	X Max
15'-0"	21'-8"±	17'-6"	6⅝"	0.1793"	12"	1¼"-7NC-3"	1'-0"	1¼"	1½"	23°	10'-6"
20'-0"	21'-8"±		6⅝"								
25'-0"	22'-8"±	16'-0"	7 5/16"								
30'-0"	23'-0"±		8"								

LUMINAIRE ARM DATA					
M Projected Length	N Rise	Min OD at Pole	Thickness	P Mounting Height 30'-0" Pole	P Mounting Height 35'-0" Pole
6'-0"	2'-0"±	3¼"	0.1196"	31'-6"±	36'-6"±
8'-0"	2'-6"±	3½"		32'-0"±	37'-0"±
10'-0"	3'-3"±	3⅞"		32'-9"±	37'-9"±
12'-0"	4'-3"±			33'-9"±	38'-9"±
15'-0"	4'-9"±	4¼"		34'-3"±	39'-3"±

Pole Type	Load Case	Wind Velocity mph	POLE DATA: A Height	Min OD Base	Min OD Top	Thickness	Alternative Section B Length	Alternative Section Bottom	Alternative Section Top	BASE PLATE DATA: C	D1 Bolt Circle	Thickness	Anchor Bolts Size	Luminaire Arm	Signal Arm	CIDH PILE FOUNDATION: Diameter	Depth	Reinforced
16-2-100	2	100	18'-6"	10¾"	8¼"	0.1793"	None			1'-6"	1'-5½"	1½"	2"ø x 42" x 6"	None	15'-0", 20'-0"	2'-6"	7'-0"	Yes
17-2-100			30'-0"		6⅝"		10'-0"	8"	6⅝"					6'-15' 12'-0"				
17A-2-100			35'-0"		5 15/16"		15'-0"		5 15/16"					6'-15' 15'-0"				
18-2-100			17'-0"		8 7/16"		None							None	25'-0", 30'-0"			
19-2-100			30'-0"		6⅝"	0.2391"	10'-0"	8"	6⅝"					6'-15' 12'-0"				
19A-2-100			35'-0"		5 15/16"		15'-0"		5 15/16"					6'-15' 15'-0"				

☐ Indicates arm length to be used unless otherwise noted on plans.

STATE OF CALIFORNIA
DEPARTMENT OF TRANSPORTATION

ELECTRICAL SYSTEMS (SIGNAL AND LIGHTING STANDARD CASE 2 ARM LOADING WIND VELOCITY=100 MPH ARM LENGTHS 15' TO 30')

NO SCALE

2006 STANDARD PLAN ES-7D

ES-7D

2-8-06